LBNL-6224E

A Guidebook on Grid Interconnection and Islanded Operation of Mini-Grid Power Systems Up to 200 kW

Chris Greacen

Richard Engel

Thomas Quetchenbach

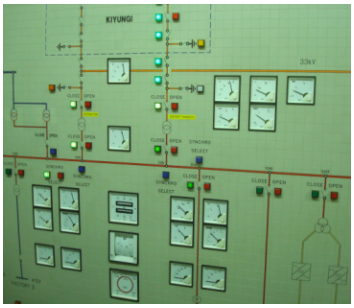

Photo credit: Chris Greacen

April 2013

Lawrence Berkeley National Laboratory

Schatz Energy Research Center

Lawrence Berkeley National Laboratory is a member of the national laboratory system supported by the U.S. Department of Energy through its Office of Science. It is managed by the University of California (UC) and is charged with conducting unclassified research across a wide range of scientific disciplines.

Lawrence Berkeley National Laboratory's contributions to this report were supported by the U.S. Department of Energy under Contract No. DE-AC02-05CH11231, in support of the Global Lighting and Energy Access Partnership (Global LEAP) initiative.

Lawrence Berkeley National Laboratory
One Cyclotron Road
Berkeley, CA 94720
http://www.lbl.gov/

Schatz Energy Research Center is a research lab affiliated with Humboldt State University

SERC's energy activities fall broadly in the categories of hydrogen and fuel cells, bioenergy, energy for the developing world, policy and analysis. SERC conducts research and analysis; designs, builds, operates, and demonstrates clean and renewable energy technologies; provides training for students in these technologies; and educates the public about the advantages of clean and renewable energy technologies.

Schatz Energy Research Center
Humboldt State University
1 Harpst St, Arcata, CA 95521
www.schatzlab.org

Lawrence Berkeley National Laboratory Disclaimer

This document was prepared as an account of work sponsored by the United States Government. While this document is believed to contain correct information, neither the United States Government nor any agency thereof, nor the Regents of the University of California, nor any of their employees, makes any warranty, express or implied, or assumes any legal responsibility for the accuracy, completeness, or usefulness of any information, apparatus, product, or process disclosed, or represents that its use would not infringe privately owned rights. Reference herein to any specific commercial product, process, or service by its trade name, trademark, manufacturer, or otherwise, does not necessarily constitute or imply its endorsement, recommendation, or favoring by the United States Government or any agency thereof, or the Regents of the University of California. The views and opinions of authors expressed herein do not necessarily state or reflect those of the United States Government or any agency thereof or the Regents of the University of California.

Authors:

Chris Greacen, Ph.D.
Palang Thai
chrisgreacen@gmail.com

Richard Engel
Schatz Energy Research Center
Humboldt State University
Richard.Engel@humboldt.edu

Thomas Quetchenbach
Schatz Energy Research Center
Humboldt State University
tgq1@humboldt.edu

April 2013

Principal Investigators:

Amol Phadke, Ph.D.
Deputy Leader (Acting), International Energy Studies Group
Environmental Energy Technologies Division
Lawrence Berkeley National Laboratory

Arne Jacobson, Ph.D.
Director, Schatz Energy Research Center
Humboldt State University

Prepared for Lawrence Berkeley National Laboratory in support of the Global Lighting and Energy Access Partnership (Global LEAP) initiative. Funding for the study was provided by the U.S. Department of Energy.

Table of Contents

Acknowledgments 5
Abbreviations and definitions 6
Executive Summary 10
Preface 17
Introduction: when the 'little grid' meets the 'big grid' 18
PART I: TECHNICAL ASPECTS OF INTERCONNECTION 23
1. Understanding the key shift from isolated to grid-connected 24
2. How is control of frequency and voltage in an isolated system different than in a grid-connected system? 24
3. Dispatch and utility-SPP communication 27
4. Islanding 28
5. Interconnection requirements for different generator types 30
6. Mechanisms to ensure safe operation of the newly connected mini-grid 33
7. Illustrative one-line diagrams for common situations 40
8. International technical codes, standards, and specifications for interconnection 45
PART II: THE INTERCONNECTION PROCESS 46
9. Review of existing interconnection policies and processes 47
10. Application for interconnection 53
11. Utility approval 55
12. Responsibility for implementation: utility or SPP? 61
13. Commissioning, testing, and follow-up 61
14. Metering 62
15. Cost of interconnection 62
16. Tying it all together: best practices for interconnection 64
17. Future Directions 65
Conclusion 66
References 66
Appendices 71
Appendix 1. Less-common relays and protection strategies generally *not* required for systems under 200 kW 71
Appendix 2. Key players in interconnection policy and mini-grids 74
Appendix 3. Recommended further reading 76
Appendix 4. Selected equipment manufacturers and suppliers 79

Acknowledgments

The authors wish to thank the following subject matter experts for reviewing and commenting on draft versions of this guidebook.

- Mr. Gabriel Barta, International Electrotechnical Commission (Switzerland)
- Dr. James Cale, National Renewable Energy Laboratory (USA)
- Mr. Michael Coddington, National Renewable Energy Laboratory (USA)
- Dr. Pramod Deo, Forum of Regulators (India)
- Mr. Ashwin Gambhir, Prayas Energy Group (India)
- Dr. Brett Garrett, Powertech (Canada)
- Dr. Peter Lilienthal, HOMER Energy (USA)
- Ms. Parimita Mohanty, The Energy and Resources Institute (India)
- Mr. Ngawang Norbu, Bhutan Power Corporation (Bhutan)
- Ms. Françoise Rauser, International Electrotechnical Commission (Switzerland)
- Dr. Tilak Siyambalapitiya, Director, RMA (Pvt) Ltd (Sri Lanka)

Abbreviations and definitions

AVR: automatic voltage regulator

ANSI: American National Standards Institute (USA)

apparent power (symbol S): the product of root-mean-square voltage and root-mean-square current, measured in volt-ampere (VA). Apparent power is related to real power (P) and reactive power (Q), according to the formula $S = \sqrt{P^2 + Q^2}$. In an electrical distribution system, conductors, transformers, and other components must be sized according to the apparent power.

brownout: a sustained drop in voltage on an electric supply system. The brownout can occur unintentionally as a result of disturbances to the system. Intentional brownouts may be used by utilities during emergencies as a load reduction strategy to avoid a complete system shutdown (blackout). Low voltages during brownouts can harm some loads, including motors.

circuit breaker: a device for stopping the current in an electric circuit as a safety measure. While low voltage overcurrent breakers detect a fault from within the breaker enclosure, many types of circuit breakers discussed in this book (e.g. medium voltage breakers and/or those sensing conditions other than overcurrent) are tripped by an external protective relay.

CT: current transformer

demand-side management: strategies and tools used to match electric demand to available supply, typically through customer incentives and education and automated load control technologies.

DG: distributed generation/generator

DR: distributed resources (IEEE terminology)

ELC: electronic load controller

embedded generator: a generator connected to a utility's electric power system (see EPS) and capable of feeding power into the system, typically but not necessarily customer-owned.

EPS: electric power system, defined by IEEE as "facilities that deliver electric power to a load" [1], i.e., the entire electric generation, transmission, and distribution infrastructure.

EWURA: Energy and Water Utilities Regulatory Authority (Tanzania)

fault: an abnormal, accidental connection or short circuit in a power system [2]. A ground fault is an accidental connection between one of the phase conductors and the ground; a phase-to-phase fault is an accidental connection between one phase conductor and another.

FERC: Federal Energy Regulatory Commission (USA)

frequency: measured in hertz (Hz), a measure of how many times per second a waveform repeats. Most household appliances and motors run on either 50 Hz or 60 Hz (depending on the country in which the grid is located), as do the major grids that interconnect large generating stations.

HV: high voltage, defined by IEEE Std. 100-2000 as greater than 100,000 V. (The IEEE further defines extra high voltage as 230,000 to 765,000 volts and ultra high voltage as greater than 765,000 volts.) As with low and medium voltage, this term can have different meanings in different contexts, even within the same country.

IEC: International Electrotechnical Commission

IEEE: Institute of Electrical and Electronics Engineers (USA/worldwide)

IGC: induction generator controller

Induction (or asynchronous) generator: an AC generator in which the rotor current is produced by electromagnetic induction; there is no direct electrical connection to the rotor. Without a grid connection, an induction generator's output frequency is a function of both rotational speed and load. When an induction generator is connected to a power grid, the frequency is regulated by the grid. If the generator's rotational speed is greater than the synchronous speed, power is produced; if the speed drops below the synchronous speed, the generator becomes a load on the grid. An induction generator requires reactive power from the grid or from a capacitor bank to create the magnetic field that induces current in the rotor.

IOU: investor-owned utility

IREC: Interstate Renewable Energy Council (USA)

LV: low voltage; generally, the voltage at which electricity is distributed to retail customers. The term "low voltage" can have different meanings in different contexts, even within the same country. For example, the International Electrotechnical Commission standard IEC 60038 defines low voltage as less than 1000 V AC, whereas the Japanese interconnection regulations define low voltage as less than 600 V [3].

MADRI: Mid-Atlantic Distributed Resources Initiative (USA)

mini-grid: an electric network used to distribute electric current within one or several villages. While there is no agreed-upon definition, mini-grids generally are understood to have fewer than 10,000 customers and include local generation.

MV: medium voltage, defined by IEEE as 1,000 V to 100,000 V

PCC: point of common coupling. The point in an electrical system where utility and customer/generator assets are connected; often, but not necessarily, the location of the meter.

power factor (PF or cos φ): the ratio of real power (P) to apparent power (S). If both voltage and current are sine waves, power factor is the cosine of the phase difference between the voltage and current. If voltage and current are in phase (the peaks and troughs occur at the same time), the power factor is 1 (all real power); if they are out of phase (the peak current coincides with zero voltage and vice versa), the power factor is 0 (all reactive power). Power factor can be either leading (capacitive) or lagging (inductive) depending on whether the current lags or leads the voltage. Large customers are sometimes penalized for low power factor; since most loads are inductive, customers can install capacitors to cancel out the inductance and improve the power factor.

pfc: power factor control

protective relay: an apparatus designed to detect an unacceptable operating condition on an electrical circuit and trip circuit breakers when such a condition is detected. Protective relays monitor such conditions as overcurrent, overvoltage, reverse power flow, and over- and underfrequency. A relay can also be programmed to issue the output after a time delay.

PT: potential transformer (or voltage transformer). A device used to transform electrical potential (voltage) from one level to another with a specific ratio. PTs typically transform large voltages to much smaller voltages for monitoring by metering and protective relay circuits. (Although step-up and step-down transformers in the transmission and distribution system also convert between voltage levels, the terms "voltage transformer" and "potential transformer" are specifically used to refer to the low-power transformers used for measurement.)

radial distribution system: a distribution system in which feeders and circuits are branched like a tree, with connection to a single substation bus. Most rural distribution systems are radial because radial networks are less expensive than loop, spot, or network distribution systems, which have connections to multiple substation buses and are more commonly found in urban commercial districts where high power reliability is a special concern.

reactive power: the component of apparent power, measured in volt-ampere reactive (var), responsible for transfer of energy between magnetic fields in generators and inductive loads such as motors and fluorescent lights. This electricity is not generated by the utility or consumed by the customer, but "sloshes" back and forth between generators (or capacitor banks) and loads with each AC cycle. By convention, inductive loads are said to "consume" reactive power and capacitive loads "produce" reactive power. Small customers are generally not billed for reactive power, but transmission and distribution system components must be sized to accommodate the increased current. The higher current also causes higher losses in the transmission and distribution system.

real power: the component of apparent power, measured in watts (W), that performs work or generates heat or light. Small residential customers are generally billed only for real power.

SGF: small generating facility, a term employed by the Federal Energy Regulatory Commission (FERC) in the U.S.

SPD: small power distributor

SPP: small power producer

synchronous generator: a generator whose frequency is a function only of rotational speed. At the moment a synchronous generator is connected to an electric grid, the generator's operator must ensure that it matches the frequency and phase of the grid power. Once the generator is operating in synchronization with the grid, the grid will regulate the rotational speed of the generator.

synchronous speed: the speed at which an induction machine (generator or motor) neither consumes nor produces power, a function of the machine design and grid frequency. Specifically, the synchronous speed n_s of a machine is the rotational speed (in RPM) of the stator magnetic field: $n_s = 120 \times f / p$, where f is the frequency of the AC supply current in Hz and p is the number of magnetic poles per phase. For example, a 4-pole machine connected to a 50 Hz grid has a synchronous speed of 1500 RPM.

TOD: time of day (electric rate)

utility grid: the system maintained by an electric utility for transmission and distribution of electric power throughout the utility's service territory

VSPP: very small power producer. This term is specific to Thailand, where it refers to power producers exporting less than 10 MW to the grid.

VT: voltage transformer. See PT above.

Note: This document describes specific companies, products, and services. These are used as examples only and should not be interpreted as endorsements.

Executive Summary

A Guidebook on Grid Interconnection and Islanded Operation of Mini-Grid Power Systems Up to 200 kW is intended to help meet the widespread need for guidance, standards, and procedures for interconnecting mini-grids with the central electric grid as rural electrification advances in developing countries, bringing these once separate power systems together. The guidebook aims to help owners and operators of renewable energy mini-grids understand the technical options available, safety and reliability issues, and engineering and administrative costs of different choices for grid interconnection. The guidebook is intentionally brief but includes a number of appendices that point the reader to additional resources for in-depth information. Not included in the scope of the guidebook are policy concerns about "who pays for what," how tariffs should be set, or other financial issues that are also paramount when "the little grid connects to the big grid."

Mini-grids, using non-renewable or renewable power resources, have long been used as an alternative to expansion of national electric grids to bring electrification to remote rural areas in developing countries. Traditionally, these mini-grids have operated in isolation from the main grid [4], but this is changing as main grids extend their reach into rural areas, offering the opportunity to interconnect existing mini-grids with national or regional energy infrastructure. For customers, the main grid offers an electricity supply constrained neither by the mini-grid's generation capacity nor by real-time renewable energy resource availability. This, in turn, can enable expansion of the customer base in step with growing village populations and/or expanded use of electricity such as cooking, space and water heating, or rural industrial loads. For mini-grid operators, grid interconnection may provide an opportunity to increase revenue by selling surplus electricity to the utility.

A mini-grid operator is often faced with several options when the main grid reaches its doorstep (Figure S1). The operator can connect its generating assets to the grid, becoming a small power producer (SPP). It can purchase electricity from the grid and resell it to consumers using the existing distribution network, becoming a small power distributor (SPD). It can do both of these, becoming both an SPP and an SPD. It can operate as an SPD when the main grid is operational, maintaining its generating assets only for backup use when the main grid is down. Finally, the mini-grid operator can abandon all its generating and distribution assets, requiring its customers to start from scratch with the main grid.

A grid-connected renewable energy mini-grid includes a locally available energy source (e.g. solar radiation or a flowing river), a device for converting this energy into AC electrical power, a distribution network, and a point of common coupling where the customer-owned equipment interfaces with the electric utility's distribution system. In mini-grids, three types of devices create alternating current (AC) synchronous generators, induction (also called asynchronous) generators, and inverters. While synchronous and induction generators directly produce AC power, the role of inverters is to convert DC power from devices such as photovoltaic solar modules into AC. We include discussion of each of these forms of generation, with special emphasis on opportunities to save costs wherever possible while maintaining safety and reliability.

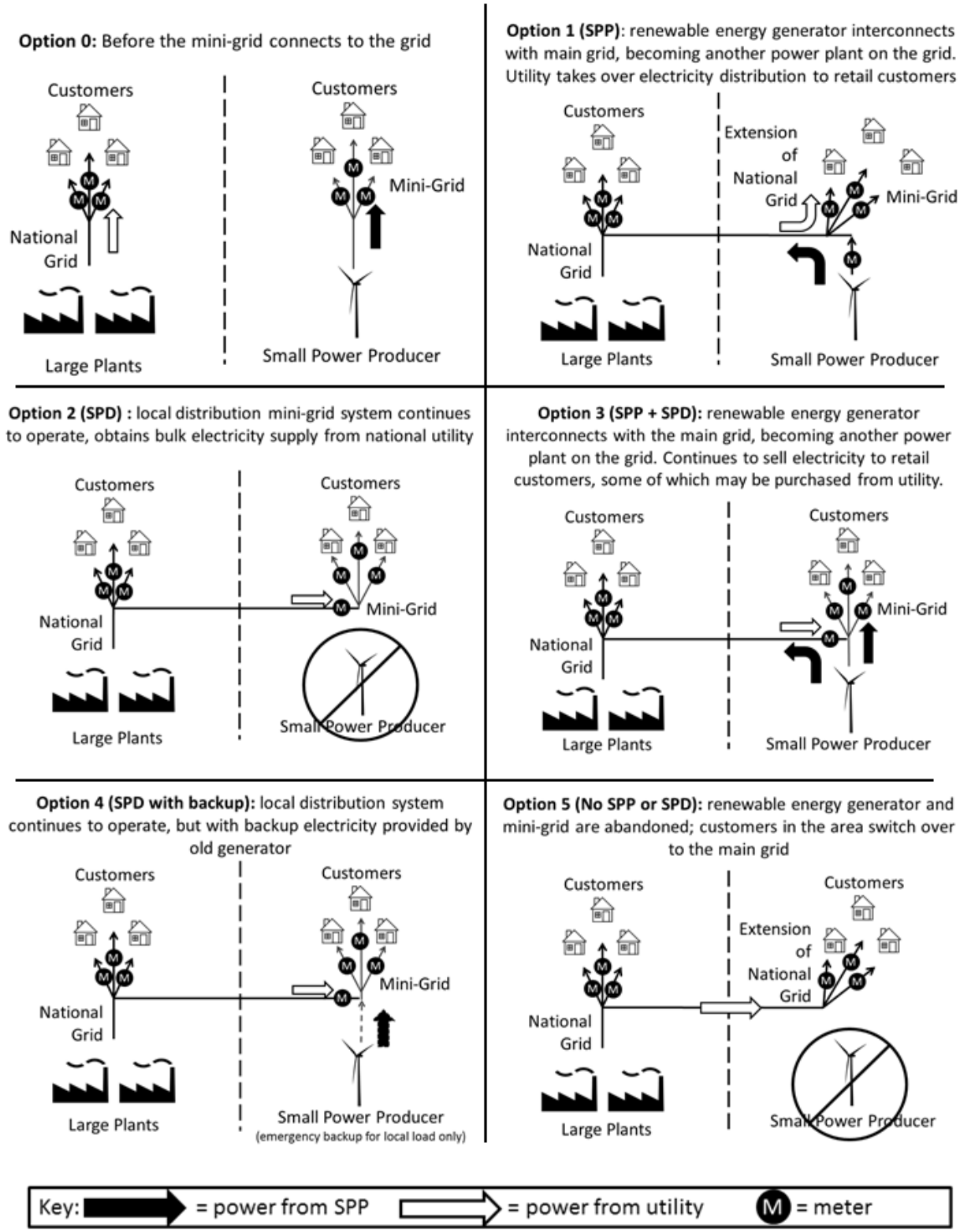

Figure S1. Options for interconnection of mini-grid with main grid.

Technical Aspects of Interconnection

Regardless of which of the interconnection options is pursued in a given case, applicable utility technical requirements for equipment and operation will need to be met. Connection of distributed electric *production* resources with the grid brings with it a number of technical challenges, for both the mini-grid operator and the national or regional utility. The mini-grid generator must be able to connect safely to the grid at the correct frequency and phase, inject electricity of sufficient quality to meet utility requirements, disconnect quickly and safely from the grid when a disturbance is detected, and reconnect (either automatically or with operator intervention) when it is safe to do so. Challenges for both the utility and the mini-grid operator include maintaining frequency and voltage regulation and coordinating the operation of protective relays and reclosers. Integration of an existing village power *distribution* system with utility assets will require conformance with utility standards, which may include safety distances and protection corridors. If the existing lines cannot be upgraded to meet utility standards, construction of new medium- and low-voltage distribution lines may also be needed.

Frequency and voltage control in isolated and interconnected mini-grids. The fundamental technical differences between isolated and grid-connected systems with local generating assets are the means of control of frequency and voltage. In an isolated mini-grid, the renewable electricity generator must control both frequency and voltage. Frequency is determined by the rotational speed of the generator shaft, while voltage depends on the changing magnetic flux through the generator's stator windings as the generator's rotor spins. In a stand-alone synchronous generator, frequency is kept constant by a regulator (governor) and voltage is varied by increasing or decreasing the strength of the rotor magnetic field. Typically, voltage is controlled by an automatic voltage regulator (AVR), which can be configured to maintain either constant voltage or constant power factor. In an isolated mini-grid, the AVR is configured for constant voltage.

On the main grid, frequency is stabilized by the rotational inertia of very large generators. When connected to the grid, a small generator will spin at the grid frequency. Thus, a grid-connected small generator makes no attempt to regulate frequency; it just injects current in step with the grid's frequency. Regulation of voltage by a grid-connected distributed generator often depends on the preference of the utility's distribution engineers. Voltage varies from node to node throughout the system depending on the distribution of loads, generation, and power factor correcting capacitor banks. In some locations, utilities may prefer that a small power producer regulate its generator to keep a constant power factor. In other cases, particularly in parts of the distribution system where utilities do not have good voltage regulation, the utility may ask the distributed generator to regulate voltage.

Dispatchability. Due to their small size relative to other generators on the grid and the intermittent nature of most renewable energy resources, renewable energy SPPs are generally not considered dispatchable assets that can be taken on- or off-line or ramped up or down as needed by the utility. However, as renewable distributed generators come to make up a larger fraction of total resources on the grid, their intermittent and irregular power production profiles can contribute to grid instability. Where this is demonstrated to be an issue, small power producers and the main grid operator may make provisions for dispatchability or provide an incentive system that encourages SPPs to match utility load patterns through pricing signals.

Islanding. Islanding refers to the condition in which a portion of the grid becomes temporarily isolated from the main grid but remains energized by its own distributed generation resource(s). Islanding may occur accidentally or deliberately. Traditionally, islanding has been seen by utilities as an undesirable condition due to concerns about safety, equipment protection, and system control. Utilities' concerns about unintentional islanding have been a major impediment to the widespread adoption of distributed generation. For the most part, these concerns have been addressed through anti-islanding features in grid-interactive inverters and the provisions included in standards such as Underwriters Laboratories (UL) 1741 and IEEE 1547.

Intentional islanding operation may be desired in cases where the central grid is prone to reliability problems. In this case, the interconnection is designed to permit the mini-grid to continue operating autonomously and provide uninterrupted service to local customers during outages on the main grid. Usually, protective devices must be reconfigured automatically when transitioning between islanded and grid-connected modes. In addition, islanding systems must include provisions to shed load that exceeds the local generation capacity when operating in islanded mode. Policy regarding interconnection of previously autonomous mini-grids should allow for maintaining future capability to operate autonomously, provided this can be done safely.

Interconnection requirements for different generator types. As discussed above, distributed generators typically come in three types: induction generators, synchronous generators, or inverters. Each of these has specific characteristics that require consideration if interconnecting to a main grid. Generally, synchronous generators have the most complex protection requirements, since they must be synchronized in frequency and phase before being connected to the grid. Induction generators do not need to be synchronized prior to interconnection; however, they cannot generate electricity without a supply of reactive power from the grid or from capacitor banks. Grid-tie inverters have the simplest protection requirements, with built-in electronics incorporating many or all of the functions traditionally performed by protective relays. However, the correct type of inverter must be selected for the application; most grid-tie inverters cannot operate without a grid connection, and most standalone inverters used in off-grid systems cannot export power to the grid. Some inverters are capable of both functions. Attempting to connect an inverter that is not capable of grid interconnection will damage the inverter.

Functions of common relays used in interconnecting small generators. Protective relays detect abnormal conditions, including short circuits and overloads, and operate circuit breakers to isolate the malfunctioning system components, preventing damage to the generator and to transmission and distribution system components. Small induction generators connecting at low voltage generally require over/undervoltage and over/underfrequency protection, while synchronous generators also need synchronizing check and over/undercurrent relays. Additional relays commonly used in systems of 200 kW capacity or smaller are discussed in section 8, and Appendix 1 provides additional information on relays less commonly required in these small systems. The operation of protective relays for a generator must be coordinated with that of relays and reclosers in the utility's transmission and distribution system; for example, time-overcurrent relays can be used to disconnect a generator quickly when a fault occurs near the generator while allowing sufficient time for the utility's relays to disconnect a distant fault.

Discrete vs. multifunction relays. Originally, protective relays were electromechanical devices, and these electromechanical relays are still manufactured. These relays were discrete—each one performed a

specific task, and a given installation required several different relays. Many protective relays now use solid-state electronic components controlled by microprocessors. A major advantage of the microprocessor-based design is that the functions of many discrete relays can be incorporated in a single package. Multifunction protective relays can provide most or all of the functionality needed to protect a small synchronous or induction generator for approximately US$1000-1500. For a single-phase induction generator, depending on utility requirements, a combined over/undervoltage and frequency relay may provide sufficient protection for approximately US$550.

Technical standards for interconnection. Several internationally recognized standards, including several IEC standards and the IEEE 1547 family of standards, guides and recommended practices, are commonly used or referenced as part of interconnection processes in developing countries. However, implementation of such standards without modification in a developing economy may be problematic, given lack of testing facilities, equipment, and trained technicians and engineers familiar with these standards. Regulators may choose to adopt modified standards in accord with available resources, as has been done in some countries.

The Interconnection Process

Codes, standards, and utility policies regarding grid interconnection vary among countries and regions. In many countries, especially in the developing world, these norms may or may not yet be well defined. In cases where they are not, interconnections are left to be resolved on a case-by-case basis, made without official sanction, or abandoned as infeasible.

Private or state-owned utilities may be unfamiliar with engineering standards and administrative processes for making interconnections. In some cases, utilities may view small generator interconnection as burdensome or as a threat to their monopoly and actively oppose it. Standards that address such utility concerns while treating distributed generators fairly do not need to be created from scratch. Policies already in effect or proposed in countries including Tanzania, Kenya, Sri Lanka, Thailand, and Vietnam, sometimes in the form of a “grid code” or “distribution code,” offer models that can be adapted. A simplified interconnection policy may be used for small power producers; such a policy should cover:

1. the application process,
2. who is responsible for analysis and approval of interconnections,
3. responsibility for payment and construction,
4. safety and protection requirements,
5. a testing and commissioning procedure, and
6. communications and data exchange between the SPP, the utility, and the regulator.

Several developing countries have created advanced policies that are helping accelerate adoption of grid-connected renewable energy, including village mini-grids. Key countries with mini-grid interconnection policies in various stages of development include Thailand, Tanzania, India, Kenya, Sri Lanka, and Bhutan. In addition, some policies in the industrialized world, including Japan, Europe, and the USA, may be transferable or adaptable to developing countries. Model policies for grid interconnection have been developed in the USA by several public and non-profit entities. Of the four major model policies, all or most agree on essential points: holding all technologies to a uniform standard, including all generators

up to 10 MW, using nationally recognized engineering standards (i.e., IEEE and UL), and not requiring additional insurance for distributed resources.

Application for interconnection. The process of applying for interconnection should be as straightforward and transparent as possible. At the same time, the process must ensure the utility and regulatory agency are provided with sufficient information from the small power producer to ensure a safe, reliable, and accurately metered utility interconnection.

Utility approval. Utility approval processes for interconnection typically employ a series of screens, questions whose answers determine which procedural pathway the power producer must follow to interconnect its system. Failing to pass individual screens results in a progressively more rigorous and costly approval process for interconnection. One important screen found in almost all interconnection procedures is system size (generating capacity), with smaller systems qualifying for a simpler and usually speedier process.

Responsibility for implementation: utility or small power producer? In many developing countries, regulators have established renewable/distributed energy goals and guidelines requiring utilities to give small generators access to utility distribution systems, but the utilities often give this lower priority than conventional electrification strategies of expanding central generation and transmission and distribution systems. To resolve this impasse, utilities in many countries now allow small power producers to take the lead on installing all of the lines, switchgear, and transformers needed to make the interconnection.

Commissioning and testing, periodic inspection, and metering. International standards, including IEEE 1547-2003, call for a commissioning or testing procedure to be performed by a qualified engineer once interconnection equipment is installed and ready for operation. This policy is typically echoed by regulators and utilities. Follow-up after interconnection may include an annual reporting requirement on the generator's part or a clause reserving the utility's right to perform on-site inspections as needed. Metering at the point of common coupling where utility assets meet mini-grid operator's assets may use simple analog meters that are read manually, but use of digital transmitting meters is on the increase and can help with early detection and repair of system faults.

Cost of interconnection. Costs are highly site-specific and can include hardware, labor costs, and fees assessed by the utility. Some regulators such as the California Public Utilities Commission have established formal fee structures to address small power producers' charges of utility gouging. Examples are given of some hardware costs and regulated interconnection fees.

Tying it all together: best practices for interconnection

Grid interconnection of mini-grids in the developing world is for the most part a fairly recent phenomenon, and the development of best practices is still a work in progress. No international group has yet produced an agreed-to set of standard policies and procedures for interconnection. Gabriel Barta, head of technical coordination for the IEC, noted that international standards for mini-grid interconnection "are crucial but practically non-existent" and that "the IEC will need the regulators' cooperation to know how to frame them." It thus appears the IEC is poised to take the lead on this important effort.

On the technical side, standards from IEC and IEEE identified in section 9 of this guide are being applied internationally to varying degrees. A key unmet need is for the regulatory "glue" that connects technical

standards and the players involved. More specifically, procedural rules are needed that energy regulators can adopt, obligating both private and public utilities to cooperate and setting out rights and responsibilities for grid connection of systems that meet agreed-upon technical standards.

The USA-based Network for New Energy Choices (NNEC) publishes an annually updated *Freeing the Grid* guide that grades states in the USA on their policies for net metering and interconnection of distributed renewable energy systems. While many of the criteria identified in *Freeing the Grid* are not applicable to interconnection of rural mini-grids in developing countries, selected best practices listed in section 16 appear highly transferable to the international context.

Future directions

Grid interconnection of renewable energy systems, including mini-grids, is a rapidly evolving landscape. New technologies including advanced integrated relays, synchrophasors, new networking devices, pre-paid energy metering systems, and super-efficient loads keep entering the market, and policy makers and regulators struggle to keep up with the changes. Inexpensive data transmission over mobile phone networks or by satellite is emerging as a solution for internet-based monitoring and control of mini-grids, including dispatch. On the policy side, power purchase agreements that allow for either dispatchable renewable generation and/or curtailment on a signal from the utility for a certain number of hours per year will be useful tools for bringing more renewable capacity online without threatening grid stability or having to dump power.

Conclusion

The merging of renewable energy mini-grids with regional or national power grids calls for standardized best practices and technologies to ensure safety, efficiency, reliability, and best value for mini-grid operators, utilities, and their customers. The practices and technologies outlined in this guidebook can be adapted to local needs and conditions in order to ensure smooth integration of mini-grids into national power systems.

Preface

The authors have developed this guidebook to help meet the widespread need for guidance, standards, and procedures for interconnecting mini-grids with the central electric grid as rural electrification advances in developing countries, bringing these once separate power systems together. This guidebook was developed under the auspices of the Clean Energy Ministerial's Solar and LED Energy Access Program (SLED). For more information on the SLED project, see: www.cleanenergyministerial.org/our_work/energy_access/

This guidebook includes separate sections on technical aspects of interconnection and on the process of interconnection employed by regulatory agencies, other government agencies, and utilities. The intended audience for most of this guidebook encompasses both technical and non-technical readers, including national energy policy makers, utility administrators, utility engineers, mini-grid operators, and community leaders. However, much of the discussion on technical requirements for grid interconnection assumes readers have an electrical engineering or similar technical background.

This guidebook cites standards and codes, technologies, and case studies from both industrialized and developing countries. Note that the role of mini-grids/microgrids is fundamentally different in these two socioeconomic contexts. "Mini-grid" is usually used to refer to isolated grids in rural areas of developing countries -- and some parts of industrialized countries (e.g. remote Alaskan communities), usually first created as a rapid or least-cost solution to bring electric service to a previously un-served, rural location. Grid interconnection comes later, as national rural electrification efforts advance.

The term "microgrid" has a number of different meanings in different contexts. Sometimes it is simply a synonym for mini-grid as the term is used in this guidebook. Elsewhere it can refer to very small-scale all-DC systems used to provide minimal electric service such as lighting and cell phone charging in multiple households. In industrialized contexts it is used to refer to distributed generation in areas already supplied with grid electricity, the intent being to increase use of on-site renewable generation and/or to improve local electric power system (local EPS) reliability or power quality. In some cases the distributed generation and on-site loads are configured as a mini- or microgrid capable of standalone operation as needed. Notwithstanding these differences, many of the technologies used in these various settings are similar or identical, and likewise many of the policies and processes that underlie grid interconnection of mini-grids may be transferable.

Not only technology but also the standards that govern the use of these technologies may be transferable among different countries. However, most technical standards development on electric power systems to date has been led by organizations in the industrialized North such as the US-based Institute of Electrical and Electronics Engineers (IEEE) and the International Electrotechnical Commission (IEC), an international standards setting body with its headquarters in Geneva, Switzerland. Such technical standards developed in industrialized countries are of critical value internationally; however, their implementation without modification in the context of a developing economy may be problematic. A lack of testing facilities, equipment, and trained technicians and engineers familiar with these standards can impede their application in the field, particularly in the remote rural areas where mini-grids are most likely to be employed. Regulators may choose to adopt modified standards in accord with available resources, as has been done by countries including Tanzania and Vietnam [5], [6]. In any case, underlying

principles of protecting health and safety of energy users and utility line workers, ensuring EPS reliability, and minimizing lifecycle costs should be foremost.

Introduction: when the 'little grid' meets the 'big grid'

Mini-grids have long been used as an alternative to expansion of national electric grids to bring electrification to remote rural areas in developing countries. These mini-grids may use non-renewable (e.g., diesel generators) or renewable (e.g., solar photovoltaic systems or micro-hydropower) resources or a combination of both as their power source. Traditionally, these mini-grids have operated in isolation from the main grid [4], but this is changing as main grids extend their reach into rural areas, offering the opportunity to interconnect existing mini-grids with national or regional energy infrastructure.

If there is no clarity as to what happens when the 'centralized' and 'decentralized' tracks come together, investors will be reluctant to invest in isolated mini-grids. This was a significant problem in Cambodia several years ago. The lack of a policy for "what to do when the big grid connects to the mini-grids" led to underinvestment by hundreds of private mini-grid operators. Many private sector operators of mini-grids limped along with second- and third-hand diesel generators and mini-grid distribution systems using undersized, non-outdoor-rated wiring often tied to trees. Investing in system upgrades made little sense to these entrepreneurs if they would be out of business and their assets scrapped if the national utility, Electricité du Cambodge, decided to electrify their service area next. The Cambodian regulator has addressed this problem by allowing SPP mini-grids that met sufficient technical standards to connect to the national grid and by setting a sufficient margin between the bulk purchase tariff and retail sales tariffs that allowed new SPDs to cover their distribution costs and earn a profit [7]. As of 2013, licenses have been issued for 82 distribution utilities that were formerly isolated diesel-powered mini-grids. Another 198 licensed isolated mini-grids remain [8].

A similar situation is occurring on Sagar Island in India's West Bengal state. Between 2000 and 2004, the government installed 11 solar generating stations on the island with a combined capacity of nearly 800 kW, supplying 1,400 households and businesses, at a capital cost of around US$2.5 million. However, citing plans for large-scale port development and industrialization, the government changed its approach starting in 2009 and connected the island to the mainland power grid. The solar systems, which could feasibly be connected to the grid to help meet the national goal of 20,000 MW of solar capacity by 2020, are instead being neglected and falling into disrepair. According to Shaktipada Ganchodhury, former director of the West Bengal Green Energy Corporation, which managed the solar project, "[t]he capital cost, transmission loss, and the generation expenses incurred in extending the main grid will be far greater…far less subsidy would be required to spread solar connectivity and generation, an option which is far more environmentally friendly." While it may be true that the scale of planned development makes grid connection inevitable, failure to connect the existing solar systems to the grid means missed opportunities both to realize full payback on earlier investment in solar and to meet future solar capacity targets [9].

A grid-connected renewable energy mini-grid includes a locally available energy source (e.g. solar radiation), a device for converting this energy into AC electrical power (which may include a DC-AC inverter), loads, and a point of common coupling where the customer-owned equipment interfaces with the local electric utility's distribution system. See Figure 1 for a schematic illustration.

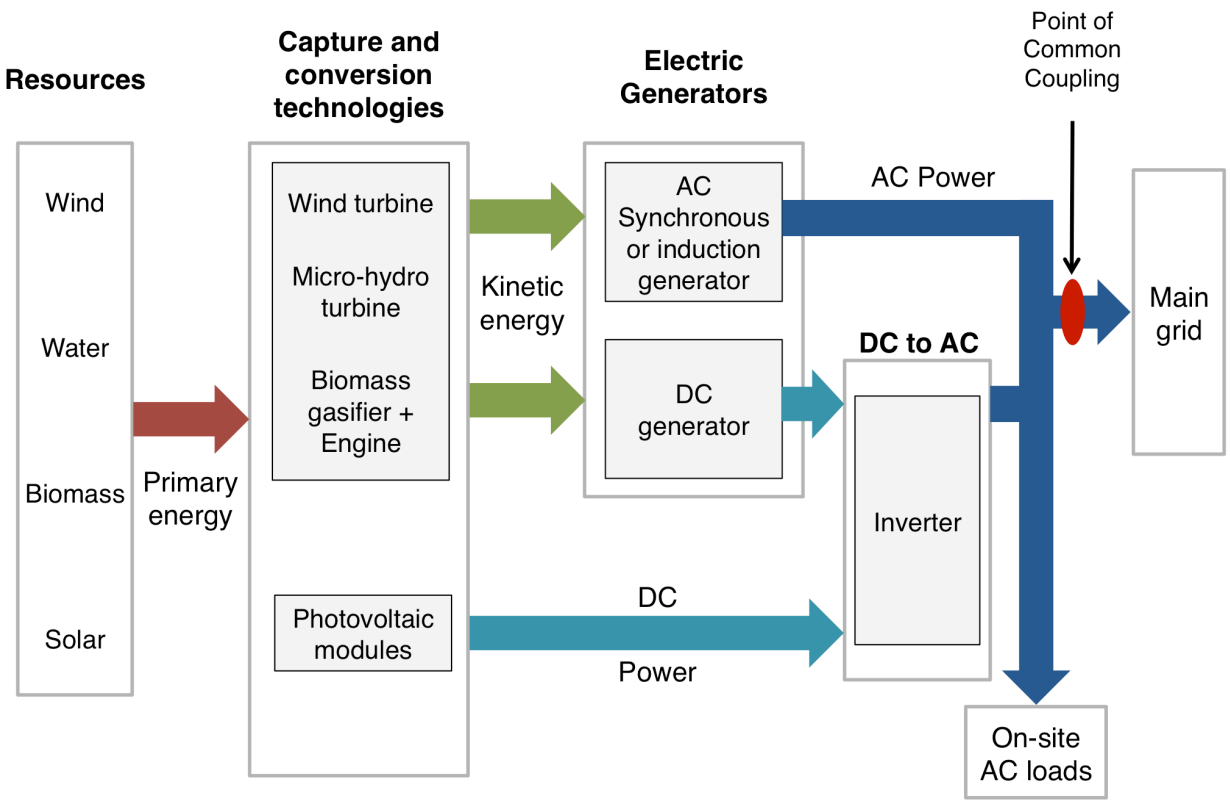

Figure 1. Energy pathways in a renewable power mini-grid connected with the utility grid.

Of course, many mini-grids do not start out being connected to the main utility grid. Consider a scenario that has played out hundreds of times: an electric energy system powers a rural distribution mini-grid in a rural village. Let's call this the base case, or "option 0." After years or decades of operation, the utility grid expands into the area. For customers, the main grid offers an electricity supply constrained neither by the mini-grid's generation capacity nor by real-time renewable energy resource availability. This, in turn, can enable expansion of the customer base in step with growing village populations and/or expanded use of electricity such as cooking, space and water heating, or rural industrial loads. For mini-grid operators, grid interconnection may provide an opportunity to increase revenue by selling surplus electricity to the utility. To take advantage of these opportunities and to avoid losing customers to the utility, the mini-grid operator is often faced with five options:

1. Interconnect the local electricity generator in parallel with the utility grid, becoming another power plant on the grid, with the utility assuming the responsibility for distributing electricity to customers (small power producer or SPP option);
2. Continue to operate the local distribution mini-grid system, obtaining bulk electricity supply from the main distribution utility (small power distributor or SPD option);
3. A combination of (1) and (2) above (SPP + SPD option);
4. Maintain the local electricity generator for use solely as backup for the local mini-grid when the utility grid goes down (SPD with backup option); or
5. Abandon the local electricity generator and mini-grid distribution system, with customers in the area switching over to the utility grid (no SPP or SPD option).

These options, and a base case where the mini-grid operates in isolation from the utility grid, are illustrated schematically in Figure 2. Under options 1 and 3, where the mini-grid's existing generating assets are kept in place, provision may be made for islanding operation, where the mini-grid maintains its ability to operate independently when utility grid power is unavailable. Under option 4, such an islanding mode is the *only* circumstance under which the local generator would operate. Islanding power systems are discussed in greater depth later.

This guidebook focuses primarily on issues related to connecting existing small renewable electricity (RE) generators to the utility grid, both in cases where the existing mini-grid distribution system continues to be used and in cases where this existing distribution system is replaced by an extension of the main grid (i.e., options 1, 3, and 4). We assume a mini-grid that was not originally designed with connection to the main grid in mind. The guidebook is intended to help owners and operators of renewable energy mini-grids understand the technical options available, safety and reliability issues, and engineering and administrative costs of different choices.

Each of the options described above has different implications for the mini-grid's existing assets, i.e., the generator and the local distribution grid itself. Table 1 below shows the expected fate of each of these major assets.

Table 1. Fate of generator and mini-grid assets under options 1-5.

Option	**Generator**	**Mini-Grid**
1 (SPP)	Used to sell electricity to main grid	Scrapped, salvaged for use at new location, or purchased by utility
2 (SPD)	Scrapped or relocated	Used by SPD to resell electricity purchased at wholesale
3 (SPP + SPD)	Produces electricity for retail sales and to sell to the main grid	Used to supply electricity to the SPP-SPD's retail customers
4 (SPD w/ backup)	used as backup supply source only when main grid is down	Used by SPD to resell electricity purchased at wholesale
5 (no SPP or SPD)	Scrapped or relocated	Scrapped, salvaged for use at new location, or purchased by utility

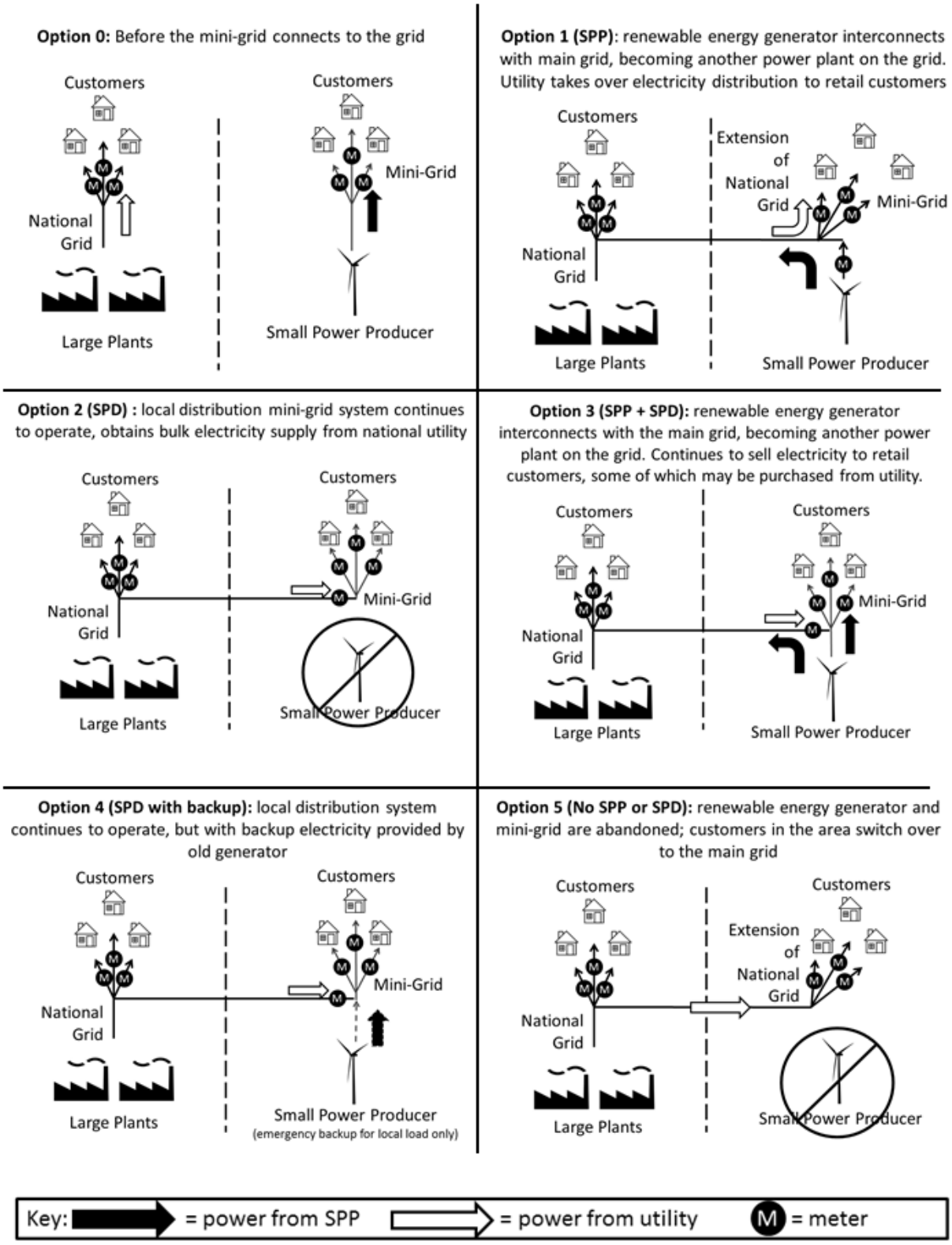

Figure 2. Options for connection of mini-grid with main grid.

In mini-grids, traditionally[1] three types of devices create alternating current (AC).[2] These include synchronous generators, induction (also called asynchronous) generators, and inverters. While generators directly produce AC power, the role of inverters is to convert DC power from devices such as photovoltaic solar modules into AC. As we discuss in detail below, each of these types of devices have distinct interconnection requirements. We include discussion of each of these forms of generation – and in so doing cover the electric generation component of equipment that is applicable to small hydropower, biomass gasification, biogas, solar photovoltaic (PV), wind power, and even diesel generators. The guidebook puts special emphasis on opportunities to save costs wherever possible while maintaining safety and reliability.

This guidebook addresses grid-interconnection of formerly isolated small generators up to 200 kW. While it does discuss costs and process flow, it does not address policy concerns about "who pays for what," how tariffs should be set, or other financial issues that are also paramount when "the little grid connects to the big grid."[3]

[1] We say "traditionally" because some newer induction or synchronous generators also incorporate inverters and are thus hybrids of these three. These special cases are not addressed in this book.

[2] When we discuss mini-grids as alternating current (AC) with fundamental characteristics like frequency, it is worth keeping in mind that in some cases, parts of the system may be operating at direct current (DC). Solar panels and batteries are inherently DC devices. Some wind turbines and micro-hydropower generators are also designed to produce DC. If these devices are used they are sometimes connected to the system through a DC bus (typically 100 volts or lower) and charge controllers.

[3] Some of these issues are addressed in "From The Bottom Up: Using Small Power Producers to Promote Electrification and Renewable Energy in Africa: An Implementation Guidebook for Regulators and Policymakers" by Chris Greacen, Tilak Siyambalapitiya, and Bernard Tenenbaum, expected publication 2013.

PART I: TECHNICAL ASPECTS OF INTERCONNECTION

Regardless of which of the interconnection options is pursued in a given case (turning the generator into an SPP, turning the mini-grid into an SPD, or both), applicable utility technical requirements for equipment and operation will need to be met.

Parallel connection of distributed electric *production* resources with the utility grid brings with it a number of technical challenges. These can include:

- frequency regulation
- voltage regulation
- disconnection and reconnection protocols in the event of grid disturbances
- safe intentional islanding operation
- control of faults when in grid-connected mode
- harmonization of technical standards among and within countries
- protection coordination

Part I of this guide considers these challenges and how they can be overcome.

Likewise, integration of an existing village power *distribution* system with utility assets will require conformance with utility standards, which may include [4]:

- safety distances and protection corridors
- conductor phase and configuration (delta or wye)
- conductor size and composition
- proper insulators and line accessories
- selection of circuit breakers to accommodate increased breaking capacities
- lightning protection
- switching equipment
- poles
- pole stays
- cable cross-section
- cable layout
- cable joints and terminations
- grounding practices
- meters and boxes

Whether it is an SPP, an SPD, or both being integrated into the utility grid, the utility can greatly facilitate such processes by making its technical standards freely available through its website or another accessible means. Recognizing that procuring IEEE or IEC standards may be difficult for SPP developers, drafters of rules and regulations should be as explicit as possible about specific technical requirements while respecting intellectual property rights of international standards publishers. Examples of openly available standards include Vietnam's *Technical Regulations for Rural Electrification/Electric Network* [5], Sri Lanka's *Village Hydro Specifications* [10], and India's Central Electricity Authority's *Technical Standards for Connectivity to the Grid* [11]. The more accessible the standards are, the easier it is for

developers to build (or modify to achieve) compliant, interconnection-ready distribution and generation systems.

1. Understanding the key shift from isolated to grid-connected

For a formerly isolated mini-grid to operate in a grid-connected mode, it must be reconfigured in ways that accomplish the following tasks:

1. Remove or disable equipment that modulates fuel supply (for example, water flow in a hydropower project) or conducts load diversion in response to frequency variations. In systems where intentional islanding capability (see chapter 4) is desired, this equipment may be left in place with controls to allow it to be temporarily enabled during islanded operation. Change the control mode of the AVR from voltage control to power factor control, if appropriate.
2. Connect safely to the grid. (This is generally an issue of connecting at the correct frequency and phase.)
3. Inject electricity of sufficient quality (appropriate power factor and voltage, low total harmonic distortion).
4. Disconnect quickly and safely from the grid in appropriate circumstances (when a disturbance is detected on the grid) and reconnect when it is safe to do so.

With these changes, the grid-connected small power producer relies on other (generally much larger) generators in the electric power system to maintain frequency regulation. However, if frequency or voltage on the grid at the site of interconnection deviates sufficiently from agreed-upon standards, the small power producer is programmed to disconnect from the grid.

The relay devices that measure these conditions and trigger disconnection are discussed later and vary somewhat depending on generator type and size.

2. How is control of frequency and voltage in an isolated system different than in a grid-connected system?

Normally SPPs are embedded in a distribution system, meaning customers are served over the same lines. This minimizes the cost of interconnection and avoids large capital costs the SPP would incur if it had to interface directly with the high voltage transmission system through expensive high voltage step-up transformers, lines, switchgear, and other grid extension costs.

Electrically, an isolated generator powering a mini-grid is very different from a small generator connected to the utility grid. The biggest difference lies in who determines the frequency. In the case of an isolated mini-grid the renewable electricity generator controls frequency. In the case of a small power producer (renewable electricity generator) connected to the utility grid, the utility grid controls frequency and the small power producer injects electricity in step with the frequency and phase of the grid. Similarly, the role of the generator in voltage control differs for isolated mini-grids and those connected to the main grid.[4] On an isolated grid, the renewable generator must control voltage, while in a grid-connected system the voltage control at the interconnection point is achieved through coordination of many factors

[4] On well-functioning utility grids, voltage seldom deviates more than 5% percent from the country's standard, while on isolated mini-grids, greater voltage deviations are not uncommon.

including the SPP generator, other generators on the network, as well as the operation of devices such as capacitor banks installed on the utility network.

Power system frequency in a given country is normally either 50 or 60 Hz. On well-functioning utility grids and mini-grids frequency seldom deviates more than 0.5 Hz from the country's standard. In actual practice, in many mini-grids (and a few poorly-functioning utility grids), frequency deviation of several hertz is not uncommon. The larger rotating inertia of combined generators on utility grids, together with more advanced control systems, helps improve frequency regulation on the utility grid compared with mini-grids. Small utility grid systems, as on islands with no grid connection to the mainland, may experience larger frequency deviations; for example, Hawaii's three largest electric utilities require inverters to tolerate frequency deviations from 57.0 Hz to 60.5 Hz [12]–[14].

The role of the distributed generator in frequency and voltage regulation are discussed for the case of isolated mini-grids and main grids below. While the discussion focuses on synchronous generators, analogous issues are faced with induction generators and inverters.

2.1. Isolated mini-grid

Frequency

For a synchronous generator, frequency is determined by the rotational speed of the generator shaft; faster rotation generates a higher frequency. A generator's frequency depends on the balance between the pressure and flow rate of water flowing through the turbine and the amount of electrical load. (Similarly, a car's motor speed depends on both the rate of fuel flow to the motor and the load on the engine.) With no load, the generator will "freewheel" and run at a very high rpm, just as a car's engine will spin quickly if revved with the transmission in neutral. If load is excessive, the generator bogs down (spins slower than normal) and the frequency drops below the standard, just as a car slows down while going up a steep hill.

In the case of an isolated mini-grid, the renewable electricity generator must maintain frequency control because there is no option of frequency control by any other means. In an isolated micro-hydropower context, commonly occurring large and sudden changes in load or generation resources on the system can drive frequency up or down. In these systems, control of frequency is accomplished one of two ways. One method uses a mechanical controller[5] that incrementally opens the water supply valve to increase water flow the moment that it detects a drop in frequency and incrementally closes the valve when it detects excessive frequency [15]. This negative feedback loop keeps frequency fairly constant under most conditions. Similarly, generators with internal combustion engines modulate the engine throttle in response to slight shifts in frequency, and steam turbines modulate the flow of steam from the boiler to the turbine to keep frequency constant.

In the second method, an electronic load controller (ELC)[6] manages the load on the generator. By adding progressively higher loads, the generator can be slowed until it reaches the exact speed (in rpm) for proper AC frequency. As long as the ELC maintains this "perfect" load, known as the design load, electrical output will be correct. To maintain the design load, ELCs typically divert excess power to a resistive heating element (safely installed to heat air or immersed in water). ELCs are commonly used in isolated micro- or mini-hydropower systems.

[5] Controllers that modulate the speed of rotating generators may also be referred to as governors or regulators.
[6] Electronic load controllers, like mechanical controllers, are also sometimes referred to as governors or regulators.

All types of frequency control can do little to help in the situation in which load exceeds the generating capacity of the source – unfortunately a common occurrence in many mini-grids in developing countries. If loads exceed the generating capacity, the generator bogs down, frequency drops, and a brownout typically ensues. More advanced utility systems employ automatic relays that drop load when frequency begins to sag (known as underfrequency load-shedding schemes).

Voltage

Assuming that load is constant, the voltage at the terminals of a rotating generator depends on the changing magnetic flux through the generator's stator windings as the generator's rotor spins. The amount of magnetic flux depends on the intensity of the rotor's magnetic field; the rate of change in flux is dependent on how fast the rotor is spinning.

In an off-grid application, generator frequency is regulated by different types of controls. Assuming frequency is kept constant by the regulator, voltage can be varied by increasing or decreasing the strength of the rotor magnetic field. This is the job of a synchronous generator's automatic voltage regulator (AVR).[7] The AVR adjusts rotor magnetic intensity (and thus generator voltage) by modulating the magnetizing current that is provided to the rotor in a synchronous generator. As voltage starts to sag, the AVR responds by sending more current to the rotor, increasing voltage.

Typically an off-grid generator's AVR is set in a mode that attempts to keep voltage constant.[8] That is, as loads change, it increases or decreases field strength in response. Likewise, in an inverter-based system, the inverter's power electronic controls are designed to keep voltage constant. As discussed below, AVRs are also used in grid-connected generators.

To summarize: for an off-grid synchronous generator, frequency is regulated by a mechanical regulator or ELC. In both off-grid and on-grid installations, voltage is independently adjusted by an AVR. Off-grid induction generators are typically controlled using an Induction Generator Controller (IGC), which works similarly to an ELC [16]. Whereas ELCs control frequency, IGCs typically control voltage; frequency is typically unregulated and depends on the inductance of the load. Inverters, used with solar electric and some wind systems, use their own strategies to address frequency control and are discussed in section 5.3.

2.2. Connected to main grid

The description above has focused on regulation of frequency and voltage for an off-grid rotating generator. Below we consider the very different case of the same generator connected to the main grid.

---

[7] Inverters and induction generators do not have AVRs, but analogous issues arise in these cases, as discussed later in this guide.

[8] If multiple synchronous generators are interconnected in an islanded grid, setting one or more to operate in power factor control mode may facilitate coordination and control. Power factor control mode modulates the generator's AVR to keep power factor constant, rather than keeping voltage constant. If two generators had AVRs on voltage control mode, a situation could arise in which the AVRs "fight" with each other. Specifically, if the AVR in generator #1 thinks voltage is too low and AVR in generator #2 has a slightly different setpoint, sensing voltage as being too high, then the first will inject current into the rotor, raising voltage and causing generator #2 to further reduce rotor current. This positive feedback loop quickly leads to severe unbalanced reactive power contribution by the two generators and possibly premature burnout of the AVR in generator #1. Having generator #1 in voltage control mode and generator #2 in power factor control mode would prevent this problem, as only the AVR in generator #1 is reacting to changes in voltage.

Frequency

When a small generator is connected the main grid, it becomes a very small part of a much larger system of much larger generators all spinning in lockstep. In this case, the small generator does not have to regulate its own frequency. As long as it is connected to the grid, it *will* generate power at the grid frequency, which is set by very large generators operating on the grid.[9] The grid-connected small generator makes no attempt to regulate frequency; it just injects current in step with the grid's frequency.

Voltage

Regulation of voltage by a grid-connected distributed generator often depends on the preference of the utility's distribution engineers. A key difference is that whereas frequency is a variable that is constant across the whole utility electric power system (and thus subject to control throughout the system by a few large generators) voltage varies from node to node throughout the system depending on the distribution of loads, generation, and power factor correcting capacitor banks. In some locations, utilities may prefer that a distributed generator operate its AVR to keep a constant power factor (power factor control mode). This helps ensure that the utility's efforts at regulating voltage (often through capacitor banks, load tap changers, and voltage regulators) are not complicated by the distributed generator simultaneously adjusting its AVR to also regulate voltage. In other cases, particularly in parts of the distribution system where utilities do not have good voltage regulation, the utility may ask the distributed generator to regulate voltage (operating its AVR in voltage control mode). Utilities often make this determination on the basis of a power flow study, in which the system voltages, currents, and power flows are modeled under minimum and maximum load conditions with the addition of the proposed distributed generator.

3. Dispatch and utility-SPP communication

Due to their small size relative to other generators on the grid and the intermittent nature of most renewable energy resources, renewable energy SPPs are generally not considered dispatchable assets that can be taken on- or off-line or ramped up or down as needed by the utility. Power purchase agreements between SPPs and utilities typically include "must take" provisions requiring the utility to accept and pay for all energy the SPP can put on the grid.

However, as renewable distributed generators come to make up a larger fraction of total resources on the grid, their intermittent and irregular power production profiles can contribute to grid instability. Where this is demonstrated to be an issue, SPPs and the main grid operator may make provisions for dispatchability. True dispatchability requires that information be made available to the utility regarding resource status (e.g. wind speed, rainfall, weather forecasts) and the availability of the plant. Two-way communication is needed allowing the SPP to transmit this information to the utility and the utility to respond with instructions. Such communication can be manual (e.g., by phone) or automated (via data acquisition systems and supervisory controls). Automated dispatch can be expensive, costing tens of

[9] To use a metaphorical example, an isolated mini-grid is like someone walking down a train track by himself. He can walk fast or slow, run or stop. A system connected to the main grid is like someone walking down a railroad track - while tied behind a slowly moving freight train. He can walk the same speed as the train, he can push against the train to try to make it go faster (putting energy into the system), or he can drag his feet to try to slow down the train (extracting energy from the train). No matter what he does, he is not going to affect the speed of the freight train (the frequency of the main grid) significantly because his capacity to inject power into the system is small compared to that of the freight train.

thousands of dollars for a system including data acquisition and data transmission system that also may include supervisory control; periodic telecommunications fees are additional to these startup costs. As a result, small SPPs are not usually dispatchable.

An alternative to dispatchable operation is an incentive system that encourages SPPs to match utility load patterns through pricing signals. Vietnam compensates SPPs and Thailand compensates VSPPs using time of day (TOD) rates. The utilities pay these generators premium prices for power generated during peak daytime hours on weekdays. In Sri Lanka and Tanzania, tariffs change seasonally, with higher payments offered during the dry season when hydropower is at a premium. Where feasible, SPPs respond to these price signals by including storage in their systems, such as ponds for micro-hydro systems or stockpiles of biomass fuel, and by performing scheduled maintenance during periods when tariffs are low.

In some developing countries, day-to-day communication between SPPs and grid dispatchers is minimal. In Sri Lanka, where some 100 SPPs, most of them mini-hydro plants, have an aggregate capacity of over 200 MW (approximately 10% of the entire grid's peak demand), there is no established system or protocol for real-time communication with the utility [17]. However, given the economic and resource management advantages of dispatchability, the long-term trend appears to be in favor of requiring dispatchable operation of SPPs. Modern telecommunications tools, including widespread mobile telephone coverage and less expensive data acquisition systems, may enable this move towards better dynamic balancing of supply and demand and integration of decentralized generating assets.

4. Islanding

Islanding refers to the condition when a portion of the grid becomes temporarily isolated from the main grid but remains energized by its own distributed generation resource(s). Islanding may be unintentional or intentional. Unintentional islanding, a potentially hazardous condition, occurs when a distributed generator fails to properly shut down during a grid disturbance. However, with appropriate safety and control mechanisms, intentional islanding can be used to provide reliable service to mini-grid customers in locations where the utility grid is unreliable.

4.1. Unintentional islanding

Islanding has traditionally been seen by utilities as an undesirable condition, as it can a) present a hazard to lineworkers who might assume the lines are not energized during a failure of the central grid, b) deny central control over power quality, and c) damage utility or customer equipment at time of reconnect if not properly coordinated. Utilities' concerns about unintentional islanding have been a major impediment to the widespread adoption of distributed generation. For the most part, these concerns have been addressed through anti-islanding features in grid-interactive inverters and the provisions included in standards such as Underwriters Laboratories (UL) 1741 and IEEE 1547.

Islanding detection methods are broadly classified as passive or active. Passive islanding detection methods (used with both inverters and rotating generation) include detection of over/underfrequency, over/undervoltage, rate of change of frequency, voltage phase jump (voltage vector shift), and reverse reactive power flow (reverse VAR) [18], [19]. In active methods, commonly incorporated into grid-interactive inverters, the inverter constantly attempts to drive the voltage and/or frequency outside the acceptable range using positive feedback [18], [20]. If the inverter is connected to a larger grid, it will be

unable to change the grid voltage or frequency; if the system is islanded, the voltage and/or frequency will rapidly be driven outside the normal range and the inverter will shut down.

Other techniques, such as transfer trip schemes and phasor measurement units (PMUs), are available to avoid unintentional islanding. These techniques, described in Appendix 1, require a dedicated telecommunications link between the SPP's protective equipment and the utility, adding significant cost and complexity to the protection system. Requirements for transfer trip and related systems may present a significant barrier to grid interconnection of small rural power systems. We encourage utilities and regulators not to require these methods unless there is a demonstrable need to protect utility equipment that cannot be protected using traditional protective equipment.

4.2. Intentional islanding

There are circumstances under which islanding operation may be desired. In the case of a mini-grid being integrated with a central grid that has historically shown itself to be prone to reliability problems, the mini-grid interconnection may be designed in a way that permits the mini-grid to continue operating autonomously and provide uninterrupted service to local customers (and uninterrupted revenue to the mini-grid operator) during outages on the main grid; this capability is known as intentional islanding. Policy regarding grid interconnection of previously autonomous mini-grids should allow for maintaining future capability to operate autonomously, provided this can be done safely. The recently adopted IEEE standard 1547.4-2011 specifically addresses power systems that include intentional islanding.

Implementing intentional islanding requires that the system perform several steps, reliably, in correct sequence and timing:

1. The distributed generator must recognize an abnormal condition on the utility grid and disconnect a circuit breaker located at an appropriate location to separate the generator and islanded mini-grid load from the main grid.
2. Upon disconnecting, the distributed generator must immediately switch from "synchronized mode" to "autonomous mode" engaging controls to regulate frequency. In the case of a hydropower project, this may mean turning on a resistive ballast load controller or other means to keep the turbine spinning at the correct speed. The generator's automatic voltage regulator (AVR) controls may need to switch over immediately to operate in a different mode. For example, if the AVR was operated in a power factor control (pfc) mode when connected to the main grid, it will need to switch to voltage control mode. In addition to the generator configuration, the settings of various protective relays will likely need to be different in islanded mode, or separate relays employed, since small generators (particularly inverters) typically produce less fault current than large generators on the main grid and voltage or frequency tolerances may need to be broader in island mode [1]. Similarly, inverter-based generation may need low-voltage ride-through (LVRT) and frequency ride-through (FRT) capability to continue operating during voltage disturbances due to faults or sudden load changes, especially while the grid is transitioning to islanded mode [1].
3. The system must continue to sense line voltage on the main grid, and when main grid power returns to stable conditions, initiate reconnection, and return to control regimes (e.g. letting the

grid control frequency) appropriate for grid-connection. Before reconnection, the mini-grid's generation must be synchronized[10] with the main grid (see section 6.1) [1].

The protective relay settings governing intentional islanding must be selected based on the local grid operating conditions and coordinated with the utility's protective relays. Separating from the main grid at minor disturbances may lead to lost opportunities for revenue generation from selling power to the utility. On the other hand, staying online "too long" and only disconnecting at more extreme disturbances on the grid can lead to cases in which the distributed generator and mini-grid voltage and frequency sag excessively, leading to brownouts and blackouts with possible equipment damage.

Similarly, settings for what constitute "stable conditions" on the main grid for reconnection must take into account the timing and effects of reclosers, if they exist on the main grid's feeder to which the distributed generator reconnects. When a line is disconnected after a fault, a recloser will automatically re-energize the line after a short delay. The distributed generator's controls must (a) disconnect the generator fast enough to avoid being online when a recloser energizes the circuit; and (b) wait to resynchronize until grid voltage and frequency are stable (typically a few cycles).

An intentionally islanded mini-grid faces, at least temporarily, all the operational challenges of a stand-alone mini-grid with no connection to the grid. Specifically, the mini-grid must "live within its means" and balance local load with local generating resources at all times. A mini-grid may experience significant load growth after connecting to a central grid. In this case, the original generation capacity of the mini-grid may no longer be sufficient to supply all of the load in islanded mode. This makes it important to have demand-side management strategies ready to implement on short notice. This can be achieved by automatically opening circuit breakers to curtail large, non-critical loads or by using "smart" load-limiting devices on household circuits that can detect the islanded condition and respond automatically [4]. The authors are aware of no intentionally islanded mini-grids that face this condition and have implemented these measures, but in principle the same relay that opens the grid-intertie breaker to initiate islanding could simultaneously send a signal to open breakers to large or non-priority loads.

5. Interconnection requirements for different generator types

As discussed above, distributed generators typically come in three types: induction generators, synchronous generators, or inverter-based systems. Each of these have specific characteristics that require consideration if interconnecting to a main grid. Each offers different advantages in terms of possibilities for interconnecting and islanding and each requires different protective devices to interconnect with the main grid. Though mentioned in this section, the required components are described in greater detail later in this guide.

5.1. Induction (asynchronous) generators

Induction generators are used for some wind turbines and CHP systems [21]. They are also used for small hydro schemes, including off-grid systems from 1 kW or less up to 100 kW or more (see Thomson &

[10] For reasons explained in section 5 below, if the generator is a synchronous generator, then both frequency and phase will need to be matched for resynchronization. If an induction generator is used, the prime mover is commonly used to bring the generator up to correct frequency to minimize inrush currents at the moment of interconnection.

Howe in Appendix 4), and grid-connected systems up to at least 1 MW [22]. Hydropower systems under 10 kW widely use re-purposed induction motors as low-cost generators, especially in Asia [16].

Induction generators are usually less expensive than synchronous machines, and there are no brushes or commutators to wear out. Grid interconnection requires simpler protective equipment, since induction generators do not need to be synchronized with the grid before being interconnected. To connect an induction generator to the grid, the generator is connected through a "soft starter" to limit inrush currents and run up to synchronous speed [23], or, for generators small enough that inrush currents won't trip breakers, the generator is simply connected at dead standstill and grid power is used to operate the generator as a motor, bringing it up to synchronous speed. Power is transmitted to the grid as long as the generator turns faster than the synchronous speed. Below the synchronous speed, the generator acts as a motor and consumes power.

Induction generators require reactive power from the grid or from capacitors to generate a magnetic field and induce current in the generator's rotor; thus, induction generators cannot produce electricity without an external source of current. Capacitors located near the generator reduce the reactive load on the grid. To avoid operating without a grid connection (unintentional islanding), induction generators are typically supplied with a capacitor bank smaller than would be necessary for self-excitation at grid frequency, requiring the grid to supply some reactive power, but less than would be required without capacitors [24]. If the induction generator has a capacitor bank that is "too small," self-excitation will still occur, but at a higher rotational speed and higher frequency. This higher frequency will trip a frequency relay, disconnecting the generator.

5.2. Synchronous generators

In a synchronous generator, the frequency of the output is directly related to the rotational speed of the rotor—at a given speed, the generator will always produce the same frequency. Synchronous generators are commonly used in isolated mini-grids, since they do not require a supply of reactive power from the grid and can self-start with no external supply of reactive power. Synchronous generators have an advantage over induction generators in that a synchronous generator's AVR can directly control power factor by supplying reactive power to the grid if needed, providing additional voltage support.

Before connecting to the grid, the voltage output from a synchronous generator must be synchronized with the grid voltage. The generator frequency and the grid frequency must be the same, and the two waveforms must be in phase (the peaks must exactly line up); if the waveforms are not synchronized, large currents will flow and the generator will be severely damaged. Synchronization can be manual or automatic. Manual synchronization is rarely used with large generators (> 100 kW) and requires a skilled operator, but can at times be used as a backup to an automatic synchronization system [25]. The need for synchronization means that the protective relays and equipment required for interconnection of a synchronous generator are somewhat more complex than for an induction generator (see section 6.1).

5.3. Inverters

Inverters are solid-state electronic devices that convert DC power to AC. Since solar PV modules produce DC, inverters are an essential component of these systems. Inverters are also used in some wind power systems, in which the generator coupled to the wind turbine generates power at varying frequency (depending on the wind speed), which is then converted to DC and back to AC at the grid frequency.

There are two basic types of inverters: grid-interactive (grid-tie or synchronous) and standalone (or off-grid). In grid-interactive inverters, the grid controls both frequency and voltage. These inverters are designed to export power to the utility grid and incorporate many of the functions traditionally performed by protective relays, including synchronization, over/undervoltage protection, and frequency protection. Exporting power to the utility grid requires a grid-interactive inverter; however, most grid-tie inverters cannot operate without a grid connection and will shut down if one is not present. (That is, most grid-tie inverters do not support intentional islanding.)

A standalone inverter regulates its own frequency and voltage and can operate without a grid connection. Some standalone inverters allow the grid to be used as a backup for the renewable generation (or, alternatively, allowing the renewable generation to serve as a backup when the grid is down), but the inverter cannot be paralleled with the grid: either the inverter is providing power to the AC loads, or the grid is providing power and the inverter is switched off. These inverters have separate terminals for the grid connection and for the AC loads; connecting the load terminals of a standalone inverter to the utility grid will damage the inverter. In many cases, standalone inverters with grid connection terminals allow intentional islanding of the mini-grid, but do not allow the SPP to sell power to the utility.

Some inverters can operate in both standalone and grid-interactive mode, allowing both grid export and off-grid (intentionally islanded) operation.[11] These inverters offer the most flexibility, allowing both intentional islanding and power export. In addition to the main grid connection, some of these inverters (including the SMA Sunny Island) allow other inverters or small induction generators to be connected to the AC load bus; this feature allows the construction of AC-coupled mini-grids using a variety of energy sources. As with standalone inverters, these dual-function inverters generally have separate terminals for the grid connection and the AC loads, and incorrect connection will result in damage to the inverter.

With standalone inverters, including those capable of grid-interactive operation, the AC load on the mini-grid is limited by the capacity of the inverter. Multiple inverters can also be added in parallel on the AC bus to accommodate higher capacities. To accommodate multiple-phase loads in larger systems, a three-phase inverter can be used, or alternatively three single-phase inverters can be networked together with one on each phase. Alternatively, large, non-critical loads can be connected separately to the utility grid (not through the inverter), if available.

When adding a grid connection to an existing inverter-based mini-grid, it is important to determine whether the existing inverter can be connected to the grid. Since standalone inverters without grid-interactive functionality cannot synchronize their output to an external voltage source, connecting the load terminals of a standalone inverter to the utility grid will damage the inverter. Standalone inverters that support grid connection generally have dedicated grid input terminals. The inverter manufacturer's specifications should be consulted to determine whether the inverter can be connected to the grid or other AC generators, and the connections should be made by a qualified installer. If the inverter is capable of on-grid operation, grid integration is literally as simple as connecting the inverter terminals to the main grid through an appropriate overcurrent-protected switch.

[11] As of mid-2012, the following inverters sized for the residential market in industrialized countries (all 8 kW or smaller) were capable of both grid-tie and standalone operation: OutBack Power GS, GFX, GTFX, and GVFX series; SMA Solar Technology Sunny Island (SI) series; Schneider Electric XW series; and Princeton Power Grid-tied Inverter and Battery Controller (GTIB) 480-100 [26]. (This is not an exhaustive list.)

Unlike rotating machines (synchronous and asynchronous generators), which generate relatively pure sine wave output using rotating magnetic fields, inverters synthesize a sine wave using solid-state electronic components. If the synthesized waveform is not exactly a true sine wave, current is introduced at frequencies that are multiples (harmonics) of 50 or 60 Hz, depending on the local utility frequency. This phenomenon is called *harmonic distortion*. Transformerless inverters may inadvertently introduce DC current into the grid, a process referred to as *DC injection*. These abnormal currents can damage utility transformers and other system components and can cause problems for other utility customers; thus, grid-tie inverters must meet strict requirements for power quality, including limits on total harmonic distortion and DC injection.

Some small mini-grids are entirely DC, with no inverters at all; for example, Mera Gao Power operates all-DC solar PV "micro grids" in 155 villages in Uttar Pradesh, India [27]. In these systems, the renewable energy source produces DC electricity, which is used to charge a battery bank to which the loads are directly connected. Customers must use low power LED lights and appliances specifically designed for low-voltage DC; the most common system voltage is 12 volts. These DC micro grids are too small and too "different" to warrant interconnection with utility AC power when it arrives. At best, the DC system could be relocated to another, still unelectrified village, or the solar panels could be repurposed to be part of a grid-connected solar electric system with a grid-intertie inverter. The low-voltage distribution DC system would be difficult to adapt safely to AC power. In any case, concerns about such systems quickly becoming obsolete may be unwarranted; considering the high fees paid by households to connect to the main grid, electrification policies that often declare a community "electrified" with only a small fraction of the households connected to the grid, and the intermittency of national grid power in rural areas, operators of micro grids like Mera Gao Power may find they retain a sufficient customer base even when the main grid arrives.

6. Mechanisms to ensure safe operation of the newly connected mini-grid

Protective relays are normally used to maintain safe operating conditions in any electric distribution system. Protective relays detect abnormal conditions, including short circuits and overloads, and operate circuit breakers to isolate the malfunctioning system components, preventing damage to the generator and to transmission and distribution system components. Relays measure current via current transformers, which step down the high currents in the power system to levels that the relays can handle. Similarly, relays in high- or medium-voltage systems require voltage transformers (also called potential transformers) for voltage measurement; however, some relays can measure low voltages (common in small power systems) directly without voltage transformers. Once a fault condition that caused a relay to interrupt a circuit has been resolved, the relay will automatically either re-close the circuit or return to a state that allows an operator to manually re-enable the circuit.

Regulators or utilities in some countries have set requirements for circuit protection. For example, Tanzania's Energy and Water Utilities Regulatory Agency in its *Guidelines for Grid Interconnection of Small Power Projects in Tanzania, Part A: Mandatory Requirements and Test Procedure* provides a table (A2) of minimum protection requirements, including over/undervoltage, over/underfrequency, and other parameters [6].

6.1. Functions of common relays used in interconnecting small generators

In power system diagrams, the functions of protective relays, circuit breakers, and other devices are indicated using device numbers, defined in the ANSI/IEEE C37.2 standard. These numbers are given in parentheses in the following discussion.

The first relay on this list, the Instantaneous/Time Overcurrent relay (50/51), is widely used in distribution systems – whether or not distributed generation is present -- to provide coordinated protection against faults. Playing a similar role to Instantaneous/Time Overcurrent relays, and also very common in distribution system, are fuses. A fuse contains a component (the *fuse element*) that melts when current exceeds a specified value. Like the instantaneous/time overcurrent relays, fuses are characterized by a time-current curve, which shows the time required to operate as a function of current.

The presence of overcurrent relays and fuses in many nodes in the utility system helps set the context for integration of distributed generation to the grid. Selection and setting of relays described below must take into account the threshold settings and the location of pre-existing Instantaneous/Time Overcurrent relays on the feeder to which the distribution generator is connecting. The coordination of relays is described below in section 6.2. Because it introduces the possibility of islanding and power flows in directions opposite to those in a conventional radial distribution system (from the customer upstream to the distribution), distributed generation requires use of additional protection to ensure that the generator is disconnected in the event that there is an interruption between the utility power and the distributed generator.

Instantaneous/time overcurrent (50/51)

Excessive current (overcurrent) can be caused by a fault or by excessive demand. Overcurrent relays are widely used by utilities in electrical distribution systems, for loads as well as for small generators. There are two closely related types of overcurrent relays, often combined into a single package: the instantaneous overcurrent relay (50) and the time overcurrent relay (51). The instantaneous overcurrent relay trips immediately if the current exceeds a set value; this functionality provides fast clearing of high-magnitude faults. However, since motors and some other electrical loads draw a brief spike of high current when starting, relying on instantaneous overcurrent alone may result in undesired “nuisance trips” when these types of loads are in use. To address this issue, the time overcurrent relay (51) allows a higher threshold for shorter periods of overcurrent. (Usually, the current threshold is inversely proportional to the event duration.)

Another function of the time overcurrent relay (51) is to facilitate relay coordination (see section 6.2) [2]. Faults close to the generator trip the overcurrent relay quickly, preventing equipment damage. More distant faults generally result in less fault current at the generator, so the time overcurrent relay trips after a delay, allowing protective relays closer to the fault to trip first.

Small generators, particularly those connected through inverters to the distribution system, can supply less fault current than large generators; if the difference between the fault current and the maximum current under normal conditions is small, detection of faults can be difficult.

Synchronizing check (25)

The synchronizing check relay (also referred to as a synchronism check, synchrocheck, sync-check, or paralleling relay) is a key interconnection component for synchronous generators. Before a synchronous generator is connected to the grid, the generator voltage must be synchronized with the grid voltage, both in frequency and in phase. If the generator and grid are not synchronized, large currents can flow at the time of connection, damaging the generator. The synchronizing check relay prevents the connection to the grid from being made when the generator is not synchronized with the grid.

If automatic synchronization is used, the synchronizing check relay may be part of the automatic synchronization system. If manual synchronization is used, the synchronizing check relay prevents the breaker from being accidentally closed when the generator is not synchronized.

Undervoltage (27)

The undervoltage relay trips if the grid voltage is too low. One key function of the undervoltage relay is to disconnect the generator if the main grid loses power. If the mini-grid generator continues to produce voltage, it could pose a hazard to utility personnel who may assume that lines are dead since the main grid is not operating. In addition, with no main grid to regulate the voltage and frequency, the mini-grid generator may not remain within the required voltage and frequency limits. The undervoltage relay can also detect short circuits and line-to-ground faults common on long distribution lines that cause the voltage to drop [28].

Overvoltage (59)

Overvoltage can be caused by a sudden loss of load and can cause major damage to system components [2]. On a grid-connected system, overvoltage can also indicate an islanded condition if the generation exceeds the local demand. The functions of the undervoltage and overvoltage relays are often combined into a single unit (27/59).

Overvoltage can also be caused by a phenomenon known as ferroresonance, which can occur when a distributed generator becomes suddenly isolated [2]. Ferroresonance occurs because distribution transformers can have nonlinear inductance under certain abnormal conditions, such as a line break in one phase of a three-phase system [29] or when distributed generation and associated poletop capacitors are islanded [30]. A peak or instantaneous overvoltage relay (59I) is required to detect the nonsinusoidal voltage waveform resulting from ferroresonance [30].

Over/underfrequency (81 O/U)

The over/underfrequency (81 O/U) relay disconnects the generator if the frequency is out of the acceptable range. This relay helps prevent unintentional islanding; if the generator disconnects from the grid, unless the remaining load is exactly equal to the generator power output, the generator will either speed up or slow down, with a corresponding increase or decrease in frequency. Recommended over/underfrequency protection settings for large-scale grids in the USA are about 0.5-1 Hz below and 0.5 Hz above the nominal system frequency with a time delay of about 0.1 seconds [2], but allowances should be made for nuisance tripping in grids where frequency regulation is looser than in the USA. Rate of change of frequency may also be taken into account in order to avoid nuisance tripping due to normal drift in frequency; 2.5 Hz per second is a standard allowable threshold. (This functionality is sometimes given the device number 81R.)

Voltage-restrained overcurrent (51V)

In the case of a short circuit between phases or from phase to ground, the initial high current spike decays as the voltage drops. If the current decays too quickly, it may drop below the threshold of the overcurrent relay (50/51) before that relay has a chance to operate. The voltage-restrained or voltage-controlled overcurrent relay (51V) allows the current threshold to depend on voltage, so at lower voltages the relay trips at a lower current than at the normal system voltage [28].

6.2. Relay coordination strategies

Protective relays at the generator must be coordinated with other relays on the feeder circuit in order to minimize disruption when a fault occurs. The key principle is that protective relay systems are designed to protect against faults within a specific zone. Primary relays should operate at the first sign of trouble in their assigned zone first. If they fail, backup systems should operate, isolating the fault and protecting the rest of the system. For example, in Figure 3, if a fault occurs in zone 3, the relays providing primary protection for zone 3 should open circuit breaker C, isolating the fault. If breaker C fails to open, relays in zones 1 and 2 can also isolate the fault by opening breakers A and B; these relays provide secondary protection for zone 3.

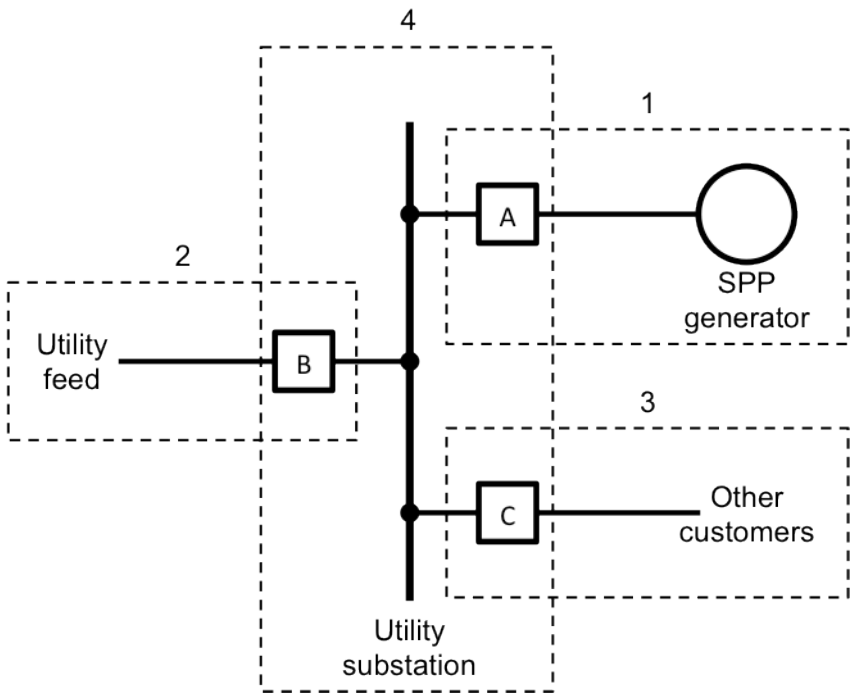

Figure 3. Simple one-line diagram illustrating the need for relay coordination. Without coordination, a fault in zones 2 or 3 could trip the generator's overcurrent protection.

Figure 3 above illustrates the need for coordination between the SPP's relays, which control circuit breaker A, and the utility's relays, which operate breakers B and C. As discussed above, a fault occurring in zone 3 should trigger a relay to trip circuit breaker C, isolating the load labeled "other customers." With the fault isolated, the SPP can continue to sell power to the grid. However, if the SPP's protective relays are not coordinated with the relays in zone 3, the SPP's relays (in zone 1) could open breaker A before the relays in zone 3 have a chance to operate. This is not an ideal situation, as the generator is

disconnected from the grid and no longer contributing power to the grid or earning revenue due to a fault elsewhere on the system. To address this problem, the relays controlling breaker C need to be configured to act quickly for a local fault. The SPP's relays, on the other hand, should operate slowly enough that they give breaker C time to operate first.

Similarly, a fault at the SPP generator should cause the relay protecting the generator circuit to operate quickly, opening breaker A. If it fails to operate, or takes too long to operate, then breakers at the utility substation may be forced to trip, causing customers in zone 3 to lose electrical service.

In general, relays should be set to operate as fast as possible for faults in the primary zone (zone 1 in the generator's case) yet delay sufficiently for faults in the backup zones. Typically, this is done using inverse-time overcurrent relays based on the fact that, all other factors being equal, fault currents for local faults are larger than for more distant faults.

The setting of time delays and sensitivity for each relay requires careful analysis. Relay coordination is generally accomplished through relay coordination studies, using specialized computer software that models the local distribution system (including distributed generation) and analyzes fault currents under conditions of maximum and minimum loads. DIgSILENT PowerFactory is one software package used by utilities in Thailand and Tanzania, among many others, to conduct relay coordination studies as well as real and reactive power flow analysis. The software simulates the behavior of the network under a variety of transient conditions created by faults in various locations.

6.3. Reclosers

An SPP's protective relays also must coordinate with reclosers located on utility lines in the zone covered by the feeder to which the SPP is connected. A recloser is a circuit breaker that can automatically reconnect after it has been opened due to a fault [2]. The reason for reclosers is that most faults naturally clear by themselves: animals die from electrocution and fall from a distribution pole after causing a fault, or tree branches fall during a windstorm, touching a power line and causing a temporary fault that clears as the branch falls to the ground. When a fault occurs, one or more relays will trip and open the circuit breaker. The recloser waits a preset amount of time (typically less than half a second) and then reconnects the line. If the fault persists, the recloser disconnects the line, waits another few seconds, and tries again. If the fault remains after several attempts, the recloser gives up and the circuit remains disabled until the fault can be cleared manually.

If a grid-connected generator fails to disconnect before the recloser first attempts to reconnect the line, the generator could be severely damaged by connection with utility lines out of phase. Coordination needs to take into consideration of the amount of time required for arc extinction under conditions in which the fault is fed by SPP. Utilities may ask distributed generators to set protection to disconnect quickly, or utilities may program the recloser to delay reclosing, or install a "block reclose" device that restrains a recloser from reclosing in the event that voltage is present on the load side of the breaker.

6.4. Discrete vs. multifunction relays

Originally, protective relays were electromechanical devices, and these electromechanical relays are still manufactured. However, newer designs use solid-state electronic components controlled by microprocessors. Electromechanical relays are discrete—each one performed a specific task, and a given installation required several different relays. While solid-state discrete relays are available, a major

advantage of the microprocessor-based design is that a single relay can incorporate the functions of many discrete relays, potentially allowing a single device to provide all necessary protection functions for a small generator. Programmable multi-function relays, also known as numerical (or numeric) relays, can result in a significant decrease in system complexity and cost, although engineers familiar with discrete-relay designs may need to develop new skill sets to install and configure multi-function relays [2].

The Beckwith Electric M-3410A is one example of a multifunction relay incorporating most or all of the protection devices needed for a small grid-connected synchronous or induction generator. The M-3410A includes several functions discussed in more detail previously: synchronizing check (25), phase undervoltage/overvoltage (27/59), ground undervoltage/overvoltage (27G/59G), reverse power (32), negative sequence overcurrent (46), negative sequence overvoltage (47), voltage-controlled or voltage-restrained time overcurrent (51V), neutral overcurrent (51N), and over/underfrequency (81 O/U). Voltage transformers are not needed for voltages up to 480 V. As of August 2012, the retail cost of the M-3410A was approximately US$1500. If only the 25, 27/59, 32, and 47 elements are needed (as was the case for a 40 kW hydroelectric system in Thailand [31]; see section 7), another option is the Schweitzer Engineering Laboratories SEL-457, which has a base price of US$1000. Other examples of functions of commercially available multifunction (integrated) relays are shown below in Table 2.

For single-phase induction generators, a low-cost option is the Crompton Instruments (part of TE Connectivity) 250 series combined over/undervoltage and frequency relay (catalog number 256-PHV). This device combines the functions of the 27, 59, and 81 O/U relays, and sells for about US$550 [32]. A three-phase induction generator could use a Crompton discrete three-phase under/overvoltage relay (253-PVE) together with a discrete over/under frequency relay (253-PHD). Alone, these relays are not suitable for synchronous generators since they do not have synchronizing check capability.

Table 2. Protective relay functions in several commercially available integrated relays. S indicates standard features; O indicates optional features [32]–[39].

Device Number	Function	Crompton	Beckwith		Schweitzer		Basler	
		256-PHV	M-3410A	M-3520	SEL-547	SEL-351	BE1-951	BE1-IPS100
21	Phase Distance			O				
24	Overexcitation V/Hz						S	S
25	Synch Check		S	S	S	S	O	S
27	Undervoltage	S	S	S	S	S	S	S
27G	Ground Undervoltage		S	S				
32	Reverse/Forward Power		S	S	S	O	S	S
40	Loss of Field		S					
46 or 50Q/51Q	Negative Sequence Overcurrent		S	S		S	S	S
47 or 59Q	Negative Sequence Overvoltage		S	S	S	S	S	S
50	Instantaneous Phase Overcurrent			S		S	S	S
50N or 50G	Inst. Ground Overcurrent			S		S	S	S
51	AC Time Overcurrent					S	S	S
51N or 51G	AC Time Ground Overcurrent		S	S		S	S	S
51V	Voltage Restrained Overcurrent		S	S			S	S
59	Overvoltage	S	S	S	S	S	S	S
59N or 59G	Ground or Residual Overvoltage		S	S		S	S	S
59I	Peak Overvoltage		S	S				
60FL	VT Fuse-Loss Detection		S	S			S	S
62	General Purpose Timers						S	
67	Phase Directional Overcurrent			S		S	S	S
67N	Residual Directional Overcurrent			S		S	S	S
78	Out of Step			O				
79	Reconnect Enable Time Delay		S	S		S	S	S
81 O/U	Over/Underfrequency	S	S	S	S	S	S	S
81R	Rate of Change of Frequency			O		S		S
Manufacturer's base retail price (USD, Nov. 2012, if available)		$550	$1500	$2205	$1000	$2380	—	—

Note that not all elements may be available simultaneously; for example, the BE1-IPS100 has one phase time overcurrent element (51), which may be configured to act as device 51V or 67.

7. Illustrative one-line diagrams for common situations

As discussed in the text above, different types of distributed generation require different relays for integration with the main grid. The following single-line diagrams (Figures 4-7) from Thailand's Provincial Electricity Authority's (PEA) grid code for distributed generation are provided as examples of typical protection requirements [40]. PEA has over 230 customer-owned generators totaling over 1200 MW of distributed online capacity. Like many countries in Asia and around the world, Thailand has a 50 Hz power grid with electricity provided to customers at 380/220 volts.[12] The relay functions required, as well as the location of the CT or VTs and the circuit breakers that the relays trip, are indicated in the following diagrams for common types of distributed generation:

- Single-phase inverter connecting at 380/220 volts
- Three-phase inverter connecting at 380/220 volts
- Induction generator connecting at 380/220 volts
- Synchronous generator connecting at 22-33 kV

Note that the nominal voltages used in these diagrams are specific to the Thai electricity distribution system. These voltages may be different in other countries; for example, 400/230 is the standard for low voltage service in many countries. In addition to voltages, other system characteristics and requirements in various countries may also differ from these Thai examples.

Missing from the above list is a one-line diagram for a synchronous generator connecting at low voltage; these small synchronous generators (less than 70 kW and connected to the low-voltage lines) are rare in Thailand. Engineers at the utility confirm [31] that a formerly isolated 40 kW micro-hydropower project in Mae Kam Pong village in rural Thailand was synchronized with a relay protection scheme similar to that shown in Figure 7 below but with only: synchrocheck (25), overcurrent (50/51), over/undervoltage (27/59), and over/underfrequency (81).

[12] 220 V is the phase-to-neutral voltage; 380 V is the phase-to-phase voltage.

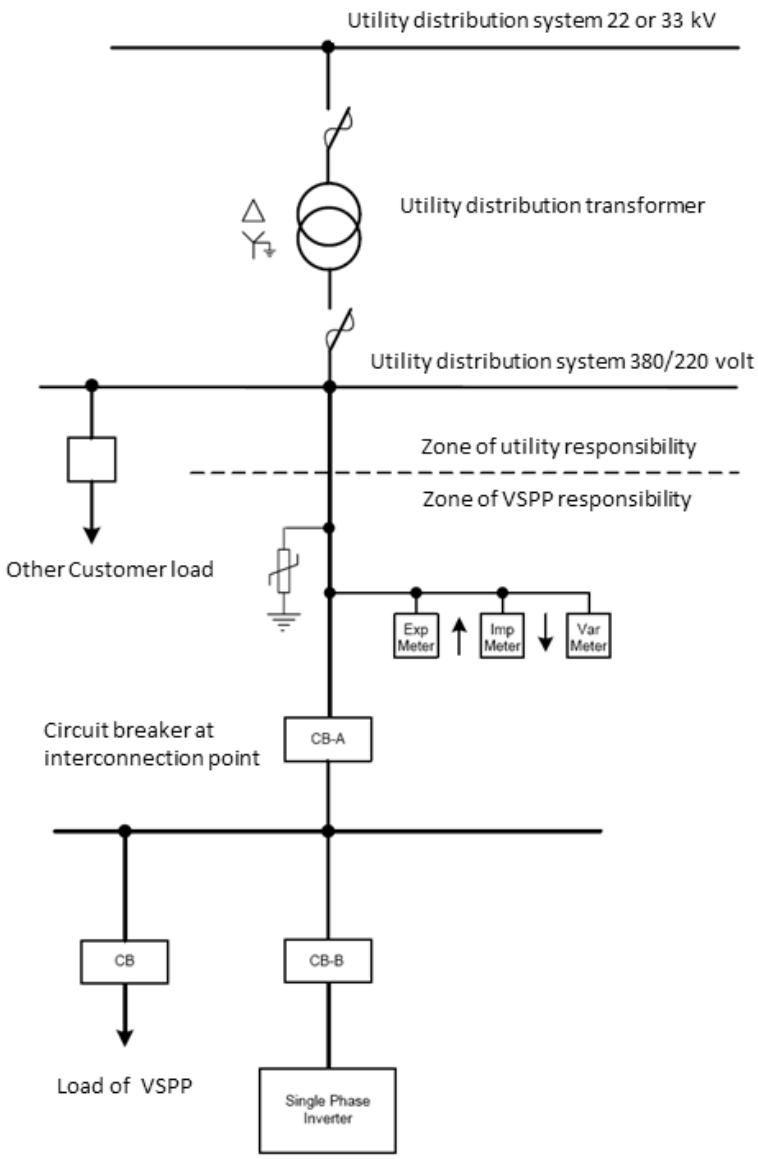

Notes: inverter must have built-in functions including:

1. Under/over voltage (27/59)
2. Under/over current (50/51 50N/51N)
3. Under/over frequency (81)
4. Sync check (25)
5. Anti-islanding protection following IEC 61727 and IEC 62116 or other acceptable to utilty

Figure 4. Single-phase inverter connecting at 380/220 volts.

Source: Provincial Electricity Authority (PEA). Used with permission.

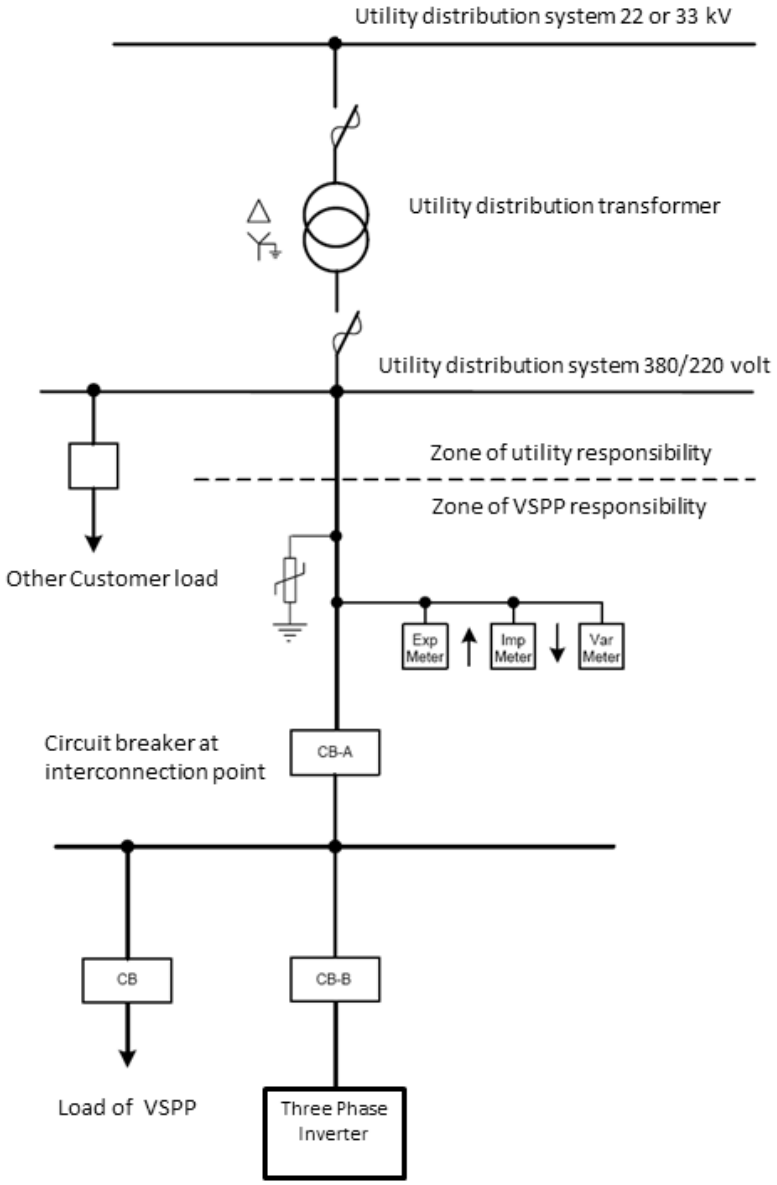

Notes: inverter must have built-in functions including:

1. Under/over voltage (27/59)
2. Under/over current (50/51 50N/51N)
3. Under/over frequency (81)
4. Sync check (25)
5. Anti-islanding protection following IEC 61727 and IEC 62116 or other acceptable to utilty

Figure 5. Three-phase inverter connecting at 380/220 volts.

Source: Provincial Electricity Authority (PEA). Used with permission.

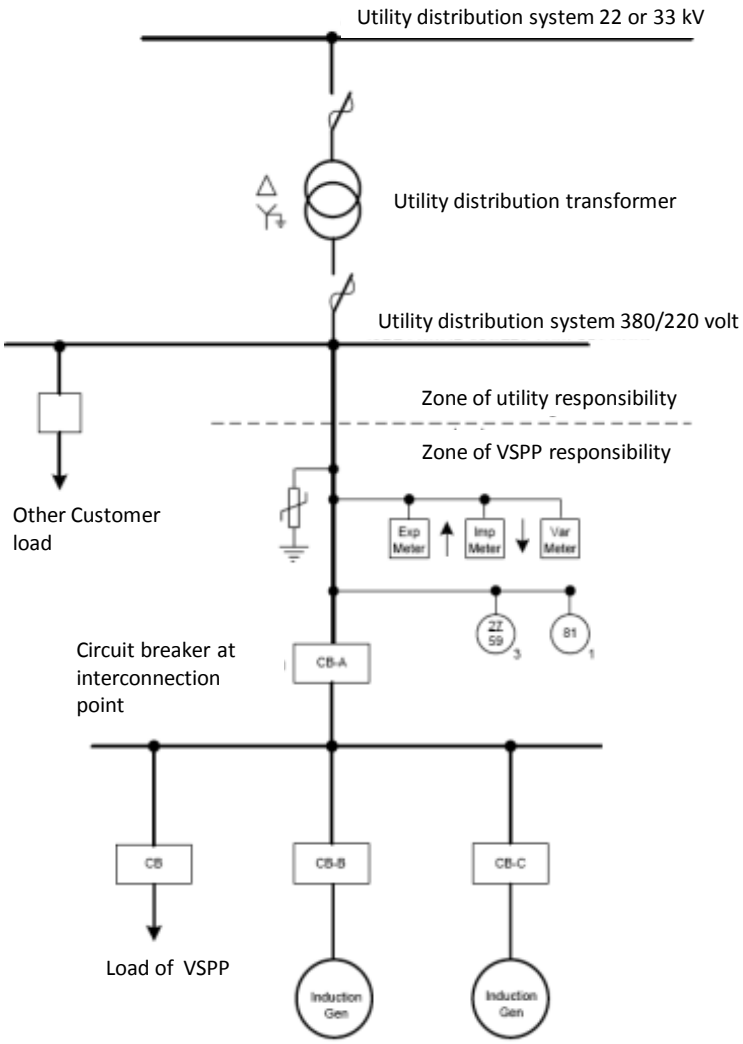

Notes:

1. If a capacitor is installed, please specify size and location.
2. If the capacitor and inductor generator are likely to be self-excited, utility will consider system on case-by-case basis.

Relay function	Details	Location
27/59	Undervoltage/Overvoltage	Trip CB-A
81	Underfrequency/Overfrequency	Trip CB-A

Figure 6. Induction generator connecting at 380/200 volts.

Source: Provincial Electricity Authority (PEA). Used with permission.

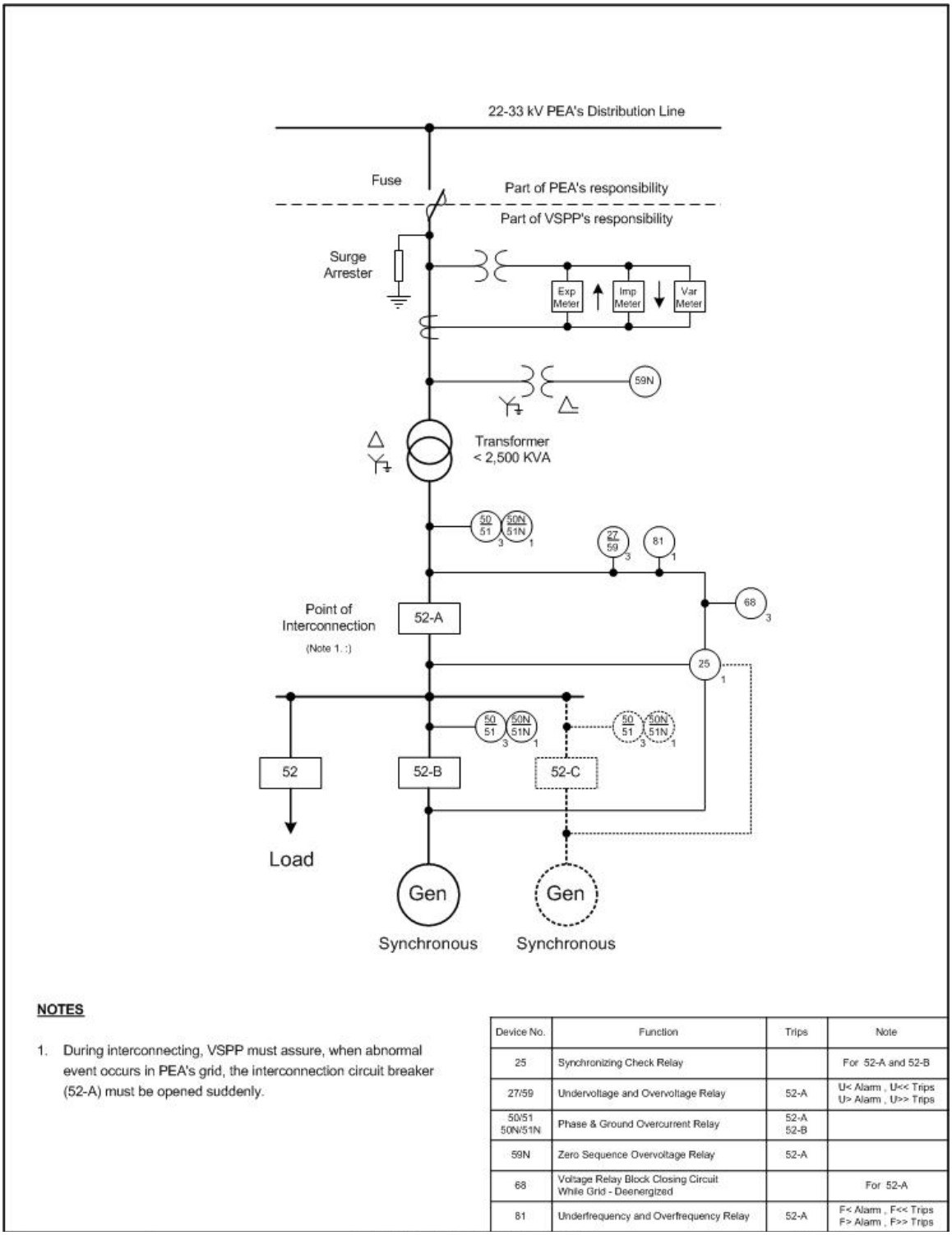

Device No.	Function	Trips	Note
25	Synchronizing Check Relay		For 52-A and 52-B
27/59	Undervoltage and Overvoltage Relay	52-A	U< Alarm , U<< Trips U> Alarm , U>> Trips
50/51 50N/51N	Phase & Ground Overcurrent Relay	52-A 52-B	
59N	Zero Sequence Overvoltage Relay	52-A	
68	Voltage Relay Block Closing Circuit While Grid - Deenergized		For 52-A
81	Underfrequency and Overfrequency Relay	52-A	F< Alarm , F<< Trips F> Alarm , F>> Trips

Figure 7. Synchronous generator connecting at medium voltage.

Source: Provincial Electricity Authority (PEA). Used with permission.

8. International technical codes, standards, and specifications for interconnection

One of the key technical standards widely used for grid interconnection is IEEE 1547-2003, *Standard for Interconnecting Distributed Resources with Electric Power Systems*. IEEE 1547-2003 is part of a set of related standards, guides, and recommended practices developed by IEEE, collectively referred to as IEEE 1547.

IEEE 1547 is a widely recognized technical standard for utility interconnection of electric distributed resources. In addition to its technical dimension, the Application Guide for IEEE 1547 discusses typical processes for interconnecting Electric Power Systems (EPS, i.e., the utility grid) with Distributed Resources (DR). In the language of IEEE, EPS refers to the utility grid, while DR includes mini-grid systems that may aggregate multiple distributed resources to connect to the EPS at a single point, typically with the ability to move energy through this interconnection in both directions.

One recently published document in the IEEE 1547 set of standards specifically addresses islanding power systems such as mini-grids: IEEE 1547.4, *Guide for Design, Operation, and Integration of Distributed Resource Island Systems with Electric Power Systems*. The guide defines types of islands (local EPS, secondary, lateral, circuit, adjacent circuit, substation, and substation bus) and operating modes (parallel, transition-to-island, island, and reconnection) and provides guidance on operating island systems in these various modes [1]. The standard discusses mechanisms for coordinating the operation of multiple distributed generators on an islanded grid and describes the types of system studies that must be performed when planning a system with intentional islanding. IEEE 1547.4's safety discussion calls special attention to arc flash considerations and reclosing procedures in the context of systems designed to operate in both islanded and grid tied modes.

While these IEEE standards have a North American focus, IEC standards that cover similar ground include IEC 61727, ed. 2.0: *Photovoltaic (PV) systems - Characteristics of the utility interface* [41] and IEC 62116, ed. 1.0: *Test procedure of islanding prevention measures for utility-interconnected photovoltaic inverters* [42]. The IEC has also published the IEC/TS 62257 set of technical specifications, titled *Recommendations for small renewable energy and hybrid systems for rural electrification*. Part 9-2 of these technical specifications addresses microgrids, though it does not cover interconnection explicitly. Part 9-2 addresses safety concerns, broadly classifying these into risk of electric shock and risk of overcurrent (which can in turn lead to catastrophic equipment failure and fire) [43].

IEC and/or IEEE technical standards are commonly used or referenced as part of interconnection processes in developing countries. As one example, the Thai Application for Sale of Electricity form references both the IEC and IEEE standards described above; systems and individual equipment can comply with either set of standards. As noted in the preface to this guide, some developing countries have created their own technical standards for interconnection that match needs and resources specific to the country. While compliance with some IEC and IEEE standards may be problematic in these countries, enforcement of a safety standard such as UL 1741 *Standard for Inverters, Converters and Controllers for Use in Independent Power Systems* or IEC 62109 *Safety of power converters for use in photovoltaic power systems* for off-the-shelf equipment does not require advanced in-country technical capacity and should be achievable.

PART II: THE INTERCONNECTION PROCESS

Codes, standards, and utility policies regarding grid interconnection vary among countries and regions. In many countries, especially in the developing world, these norms may or may not yet be well defined. In cases where they are not, interconnections are left to be resolved on a case-by-case basis, made without official sanction, or abandoned as infeasible.

Private or state-owned utilities may be unfamiliar with engineering standards and administrative processes for making interconnections. In some cases, utilities may view SPP interconnection as burdensome or as a threat to their monopoly and actively oppose it. Standards that address such utility concerns while treating SPPs fairly do not need to be created from scratch. Policies already in effect or proposed in Tanzania, Kenya, Sri Lanka, Thailand, and Vietnam (to name a few), sometimes in the form of a "grid code" or "distribution code," offer models that can be adapted.

Interconnection policies should take into account that SPPs are by definition smaller in capacity than the large, centralized generating resources that have historically made up utility portfolios. This smaller capacity justifies using a simplified approach to interconnection. Indeed, national- and state-level regulators with advanced interconnection policies in many countries do offer simplified processes for small and mid-size generators, as discussed below. Such a simplified policy should cover:

1. the application process,
2. who is responsible for analysis and approval of interconnections,
3. responsibility for payment and construction,
4. safety and protection requirements,
5. a testing and commissioning procedure, and
6. communications and data exchange between the SPP, the utility, and the regulator.

In general, utilities should to the extent feasible treat a mini-grid with a single point of interconnection to the grid the same way they would treat a single customer of comparable scale that has both onsite loads and onsite distributed generation. Thus, the types of policies and procedures that have been developed around the world in recent years for connecting such customers to the grid should be adaptable to mini-grid interconnection. In many cases, however, a mini-grid that sells electricity to local retail customers is treated by the regulator as a utility, and is thus subject to different rules and tariffs than a simple distributed generator serving only on-site loads.

In El Salvador, one of the authors is familiar with grid-connected solar electric systems installed at a government facility and at a prestigious private school. In both cases, the client and the system installer needed to negotiate with the local electric utility to come to agreement on interconnection and net metering arrangements due to a lack of national rules or standards governing such projects. In one of these cases, this process took well over a year to resolve.

In another case in El Salvador, a prominent small business installed a grid-connected solar photovoltaic system with battery backup. The grid connection was made without utility sanction, as obtaining such approval was deemed infeasible by the business owner. In this case, the system included UL-listed inverters that appeared to be installed properly, providing adequate protection against unintentional islanding. The business owner stated that the intertie had not come to the utility's attention, as the system was not sized to produce net positive generation over a utility billing period.

These cases resulted in wasted time and repetition of effort that could be avoided with a standardized utility interconnection policy. In addition, unregulated utility interconnection of DG clearly presents a safety hazard to both energy users and utility field employees. Fortunately, SIGET, the Salvadoran utility regulatory authority, was in the process of developing such policy with special attention to small renewable electricity generators (< 20 MW) at the time of the author's initial visit to El Salvador.

9. Review of existing interconnection policies and processes

Here we review existing policies on grid interconnection of renewable energy resources in a variety of international settings and at different scales. A number of less industrialized countries have developed and implemented policies that could easily be adapted for use in other developing countries. Policies in industrialized countries are also considered for their possible transferability to developing economies.

In addition, we briefly consider some highlights of different countries' interconnection processes, returning to review details of some of these countries' policies below in the discussions of application, approval, implementation, commissioning and testing, metering, and costs.

9.1. Advanced policies in developing countries

Several developing countries have taken the lead on developing locally appropriate policies for grid interconnection of renewable energy generation. Table 3 lists some of these policies and their key characteristics, with additional discussion following.

Table 3. Example interconnection policies in developing countries

Country	Responsible Agency	Policy Document	Year Adopted	Generating Capacity Limit
Thailand	Energy Regulatory Commission	Regulations for the Purchase of Power from Very Small Power Producers	2002	10 MW (export)
Tanzania	Energy and Water Utilities Regulatory Authority	Guidelines for Development of Small Power Projects	2009	10 MW (export)
India	Renewables and microgrid working group of the India Smart Grid Forum	Interconnection standards and policy and regulatory aspects of microgrids for India	In progress	To be determined
Kenya	Energy Regulatory Commission	Connection Guidelines for Small-Scale Renewables	In progress	10 MW (export)
Sri Lanka	Sustainable Energy Authority	A Guide to the Project Approval Process for On-Grid Renewable Energy Development	2011	10MW (unless project has a directive from Ministry of Power & Energy)

Thailand

Thailand has long been a leader among developing countries in renewable energy development, with attractive utility tariffs and extensive "low-hanging fruit" opportunities for biomass renewable energy from agro-industry residues (sugar cane, rice husk, tapioca). As of March 2012, over 1,200 MW of renewable electricity generation projects are online under the country's Very Small Power Producer (VSPP) program, with over 3700 MW of projects with signed PPAs in the pipeline. However, as discussed below under "Application for Interconnection," the Thai government has in recent years made the process of interconnection more cumbersome by introducing subjective approval steps and requiring applicants to demonstrate financial soundness and post refundable deposits. These changes have caused a slowdown in what was a dynamic renewable energy market [44].

Tanzania

Despite severe problems caused by the insolvency of the national utility, TANESCO, Tanzania has proven itself a model of Small Power Producer policy in an emerging African economy with three SPPs currently online selling electricity to the grid and more than a dozen in the pipeline. Tanzanian regulators strive for a light touch, avoiding burdensome regulations and paperwork, but they have produced a number of useful documents for SPPs wishing to connect to the grid. They spell out a clear and transparent process for development and interconnection of an energy project [6], [45]. The application for interconnection of systems 10 MW and smaller is a straightforward 3-page document [46].

India

In 2012, India's Central Electric Authority released a draft set of regulations titled *Technical Standards for Connectivity of the Distributed Generation Resources* [47]. The standards hold the distribution utility ("licensee") responsible for performing an interconnection study to determine equipment needs, likely impacts on neighboring customers, interconnection capacity, and any special measures needed to ensure safety of personnel and equipment. These standards are for distributed generators of all scales and do not specify an upper capacity bound for projects eligible for preferential permitting treatment as is done in regulations of some other countries discussed here.

The India Smart Grid Forum's working group #9 on Renewables and Microgrids is currently developing interconnection standards and policy and regulatory recommendations specific to microgrids. Working group #9's objectives include developing standards, guidelines, and technology recommendations for integration of renewable-based microgrids with the main grid; developing a methodology for cost-benefit analysis of microgrid projects specifically in the Indian context; and developing tariff policy recommendations for grid-connected renewable energy microgrids.

Phase 1 of India's flagship solar program, the Jawaharlal Nehru National Solar Mission (JNNSM), focused on grid-tied solar photovoltaic projects of 5 MW capacity each. The plan for Phase 2, currently in the draft phase, includes separate goals of 1) deploying non-grid-connected solar mini-grids of up to 500 kW each for rural electrification in remote areas and 2) construction of utility scale, grid-tied PV projects for bulk power generation. The draft does not include discussion of facilitating grid interconnection of community-scale solar mini-grids [48].

Note that in India, as in the U.S., much of the regulatory and policy-making activity with respect to energy takes place at the state level. This is distinct from most developing countries, where such authority is highly centralized. As such, Indian policy on interconnection is not monolithic, and policies can vary substantially among states. Ownership of public-sector generation and transmission assets, as well as regulatory authority over the power sector, is split between the central government and the states. This results in a sometimes-complex regulatory environment for SPPs wishing to interconnect resources with the grid [49]. A joint project currently under development by German aid agency GIZ and India's Ministry of New and Renewable Energy, *solarguidelines.in* seeks to address this complexity by providing guidance on renewable energy project development in India, including regulatory compliance, at both the central and state levels.

Kenya

Kenya began offering feed-in tariffs to encourage renewable energy development in 2008, but to date there has been little project development in response. With support from the World Bank, Kenya conducted a study in 2012 on how more renewable energy development in the private sector can be achieved.

One of the recommendations from the study was that Kenya Power, the national electric utility, introduce new interconnection procedures. For example, Kenya Power would respond to an initial Expression of Interest from an SPP to interconnect a system with a Grid Connection Opinion. This simple one-page document would inform the SPP of Kenya Power's opinion on the proposed interconnection and alert the SPP of any potential problems with the project from the utility's perspective. In some cases, the Grid

Connection Opinion might lead to the scrapping, redesign, or relocation of a project the utility deems infeasible as proposed. As part of its effort to encourage renewables, the Kenyan government and its consultant plan to develop a suite of new models, tools, and guidelines, including *Connection Guidelines for Small-Scale Renewables* (cited in [50]).

Sri Lanka

Sri Lanka was an early leader in grid-connected small hydropower, with many systems originally built to serve on-site loads at tea plantations. More recently, however, grid capacity constraints have limited the ability of existing mini-hydro SPPs to interconnect. The national utility, Ceylon Electricity Board (CEB), addressed this issue in one case by sharing 50-50 the cost of grid upgrades with a group of SPPs wishing to connect. In the interest of a long-term solution, recent regulatory changes and the publication of a project approval guidebook for grid connection of new and existing renewable energy projects have streamlined the process for bringing new renewable generation online.

Sri Lanka's Sustainable Energy Authority, producer of the guidebook, lays out a process in which an applicant first registers a project and performs a pre-feasibility study. The applicant next requests provisional approval, securing the SPP's right to develop a specific resource for up to twelve months. Before this approval expires, the developer must apply for and be granted an energy permit, allowing the SPP to proceed with project construction. The energy permit must be approved by multiple agencies, depending on the type of project and its expected impacts. The guidebook provides detailed instructions for the entire process, application forms, and application process flowcharts in a single, concise publication. Checklists specific to the energy resource type (biomass, hydro, wind, etc.) indicate what must be included in the pre-feasibility study.

Bhutan

Almost all electric power infrastructure in Bhutan, including remote mini-grids as well as the utility grid, is owned and operated by two government-owned corporations: the Bhutan Power Corporation, Limited, which operates the national grid, mini-grids, and small generating plants, and the Druk Green Power Corporation, which owns and operates four large hydropower plants [51]. They are regulated by an autonomous agency, the Bhutan Electricity Authority (BEA). This arrangement simplifies the technical and policy issues that can complicate grid interconnection in other countries.[13] The *Electricity Act of Bhutan, 2001,* which created the BEA, also establishes a licensing system for distribution, generation, and transmission system operators and allows for the possibility of private-sector participation [52]; the *Bhutan Electricity Authority Grid Code Regulation, 2008* sets forth technical and procedural rules governing this system [53]. Currently, the Bhutan Power Corporation and Druk Green Power Corporation are the only licensees [54].

Several small hydropower systems were built in Bhutan in the late 1980s and early 1990s to meet local energy demand in small rural communities [55]. According to a 2008 consultant report, three of these systems are now no longer able to keep up with peak demand in their respective communities, while they have to dump power during off-peak times [56]. Recent expansion of the national electric transmission system has made grid connection of these mini-grid systems feasible. Grid connection would ensure peak

[13] While this "monolithic" arrangement does have significant advantages for grid interconnection, it may limit the flexibility of mini-grid systems to incorporate alternative construction methods, metering or demand-side management technologies, and tariff structures that would not be appropriate for use on the utility grid.

demands are met and, since Bhutan exports much of its electricity to neighboring India, provide a market for the off-peak power currently being dumped. The generating equipment was estimated by the consultant to have 15-20 years of remaining useful life, bolstering the economic case for interconnection. The engineering aspects of grid interconnection are fortunately well understood in Bhutan (at least by Bhutan's Department of Energy and its consultant on the study), but a consistent and transparent national policy on making such interconnections, addressing permitting, inspections, maintenance, and responsibility for costs, has not yet been developed [50].

9.2. Policy in the industrialized world

In the industrialized world, three regions/countries with particularly well-developed policies on grid interconnection of distributed generation are the United States, Europe, and Japan.

- In the United States, key interconnection policy is largely made at the state level. The large number of stakeholders makes for a complex policy picture. Model interconnection procedures have been developed by the federal government, state and regional authorities, and non-profit energy advocacy organizations in an effort to better harmonize policy across the many jurisdictions, as detailed below.
- In Europe, a number of countries lead the world on renewable energy generation, with interconnection policies that have contributed to this important achievement. However, a regional standard across the European Union does not yet exist. The European Distributed Energy Resources Laboratories (DERlab), representing 11 countries, has proposed a seven-part European Standard for Interconnection of Distributed Energy Resources (EDIS), currently in outline form.
- In Japan, the three governing technical requirements (described in [3]) are *Technical requirements guideline of grid interconnection to secure electricity quality*, *Grid Interconnection Code* (JEAC 9701-2006), and *Harmonics Restraint Guideline for HV or SHV Consumers*. (JEAC 9701-2006 has since been superseded by JEAC 9701-2012.)

United States

Standardization of grid interconnection procedures in the USA has been challenging, given the multitude of privately and publicly owned utilities (over 3,000) and differing federal and state utility regulations. Starting in the early 2000s, several governmental, industry, and public interest organizations worked at the national level to develop standards for interconnection of renewable energy resources to the grid. The intent was to create consistent standards across the country instead of a patchwork of inconsistent standards from state to state and utility to utility with all the accompanying inefficiencies. The Database of State Incentives for Renewables and Efficiency (DSIRE) currently lists 44 of the 50 USA states as having adopted interconnection standards for distributed generators; some of these standards conform to one or more of the model standards discussed below, while others are unique [57].

For small distributed renewable energy systems (under 2 MW), there are four major interconnection procedures in effect that have served as models for state- and utility-level policies:

- California Rule 21
- Mid Atlantic Demand Resource Interconnection Procedures (MADRI)
- Interstate Renewable Energy Council (IREC) Model Interconnection Procedures
- Federal Energy Regulatory Commission (FERC) Small Generator Interconnection Procedures

FERC's federal standard applies only to generating systems 20 MW or less that connect to the grid at transmission level (i.e., high voltage) [58]. Distribution level connections are governed by state public utility commissions (e.g., Rule 21 in California's case) [59]. The MADRI procedures were developed collaboratively by state and federal regulators, utilities, small generators, and other stakeholders and are non-binding guidelines intended for adoption by public utilities commissions in Delaware, Maryland, New Jersey, Pennsylvania, and the District of Columbia [60]. IREC is a non-profit private organization that advocates for renewable energy [61].

The four standards listed above are compared with each other in a report by the Solar America Board for Codes and Standards (Solar ABCs) [62], a Department of Energy-funded program dedicated in part to improving grid access for solar energy and other forms of distributed generation. The Solar ABCs report applied grading criteria adapted from the Network for New Energy Choices' *Freeing the Grid* to evaluate the four standards, assigning FERC's SGIP an arbitrary grade of C to define the middle of the grading scale. The IREC model procedures, which are generally the most liberal (i.e., generator-friendly) scored an A, California Rule 21 got a B, and the MADRI procedures received a low C. Most state rules in effect at the time of the report (2008) scored even lower than the MADRI standard. All or most of the four major standards agreed on essential points: holding all technologies to a uniform standard, including all generators up to 10 MW, using nationally recognized engineering standards (i.e., IEEE and UL), and not requiring additional insurance for distributed resources. IREC has participated in proceedings in multiple states in an effort to have its model interconnection rules adopted, with some degree of success.

IREC has proposed a set of principles for utility interconnection of distributed generation. Among them:

- Policy should be set at the state level, with all utilities in a given state, including municipal utilities, electric cooperatives, and investor-owned utilities subject to the same policy.
- All customer classes should be eligible for interconnection.
- Projects should be subject to one of three or four separate levels of review according to system capacity and complexity and component certifications, with clear and transparent technical screens determining which review level applies.
- There should be no limit on capacity of individual systems.
- Application fees should be minimal, especially for smaller systems.
- Utilities should not be allowed to require customers to carry additional liability insurance for interconnection.
- A dispute resolution process should be available.

Europe

Western Europe is home to some of the world's most ambitious renewable energy policies and highest levels of grid-connected renewable energy adoption. In Germany, 29% of generating capacity in 2009 was renewable.[14] Germany's rules strongly favor renewables; utilities are required to exhaust all other

[14] Some developing countries, including Nepal, Bhutan, and Laos, generate close to 100% of their electricity using hydropower, much of it from large dams. However, large hydropower is widely recognized as having significant environmental and social impacts and thus is not classified as "renewable" by many authorities. For example, in India 5 MW and 25 MW are used as cutoff points below which hydropower projects are given special preference due to their lower impacts. Likewise, Britain, France, and Germany recognize only hydropower projects below 20, 12, and 5 MW respectively as renewable [63].

options before curtailing renewable generators in the event of capacity oversupply, and if renewable SPPs are curtailed, they continue to receive their guaranteed feed-in tariff as if they were still on-line. The Second German Law on the Energy Industry (adopted July 2005) and the German Law on Renewable Energy Sources (October 2008) codify SPP-friendly policies, requiring utilities to connect SPPs to the grid, locate the PCC as close as possible to the generating source, and provide sufficient distribution capacity to accept the generator's full output. High penetration rates of intermittent wind and solar have in some cases become a threat to grid stability. To address this, plants rated at over 100 kW now must include two-way telemetry to provide real-time electricity production data to the utility and allow dispatchable operation [64].

In Spain, another especially renewables-friendly nation, 41.5% of total generating capacity in 2010 was solar, wind, and hydroelectric power, with a significant additional share of the capacity in the form of waste-to-energy and cogeneration systems. Spain's policy is distinguished by separate interconnection processes for connecting to the grid at distribution or transmission voltage levels. For transmission-level connections, the process is divided into an application phase and a commissioning phase. For distribution-level connection, Spain uses a seven-step process, with separate versions of this process for PV and non-PV projects. Telemetry for dispatch is required for capacities of 10 MW and above [64].

Despite these progressive national policies, no common standard for utility interconnection of distributed generation has yet been adopted across Europe. Eleven European countries have been collaborating on development of such a standard, with the European Distributed Energy Resources Laboratory (DERLab) leading the effort. DERLab's 2008 Deliverable 2.1 proposes a standard in outline form, which would use a combination of voltage, power, and per-phase current capacity to categorize generators, as summarized in Table 4. Part 0 of Deliverable 2.1 is a recommended interconnection procedure, but in the published draft of this document, this section is merely a placeholder that has not yet been developed [65].

Japan

Japan's regulations for interconnection differentiate facilities by voltage at which they connect to the distribution system, using low voltage (<600V), high voltage (600V-7kV) and super high voltage (>7kV). This contrasts with the US and several other countries, where the major standards and procedures for interconnection categorize generators into tiers by power capacity (kW or kVA). A detailed matrix provided in the International Energy Agency's *Design and operational recommendations on grid connection of PV hybrid mini-grids* presents the differing requirements for these categories of systems, addressing power factor, normal and instantaneous voltage fluctuation, islanding, and other parameters [3].

10. Application for interconnection

The process of applying for interconnection should be as straightforward and transparent as possible, while ensuring the utility and regulatory agency are provided with sufficient information from the small power producer to ensure a safe, reliable, and accurately metered utility interconnection. Several organizations in the USA and elsewhere have proposed model interconnection processes, and there are many real-world examples available of interconnection applications. In this section, the cases of Tanzania, Thailand and the US are explored in detail. Note that the discussion here is limited to the application process within purview of the SPP, the electric regulator, and the utility. In most cases, there

will be additional policies and application processes involving environmental impact review, construction permitting, and securing of land title and/or water rights.

Tanzania

In Tanzania, the Energy and Water Utilities Regulatory Authority (EWURA) has established a clear process for project development and utility interconnection by small power producers (SPP). According to a June 2009 presentation by Anastas Mbawala and Norbert Kahyoza of EWURA as part of the Maputo Workshop of the Africa Electrification Initiative, the agency's intent was to create "light-handed regulation" that would minimize paperwork and maximize renewable energy development [66].

After completing preliminary steps of procuring land and resource (e.g., water) rights as appropriate, the SPP must request a Letter of Intent (LOI) from the utility serving the project site (at this time, a single national utility, TANESCO, provides all electric service). The LOI, based on a three-page template, indicates that the utility plans to cooperate with the SPP and is willing in principle to enter into a power purchase agreement (PPA).

After completing business registration and licensing, project construction permitting, and environmental/social impact assessment, the developer must execute a standardized PPA with the utility. The PPA is initiated by the SPP filing an Application for Interconnection and Sale of Electricity. The template provided for this purpose is three pages long and calls for information on the location and capacity of the plant and some details on the generator (voltage and power rating, reactance values, and transient and sub-transient time constants), transformer (capacity, reactance, resistance, and voltage ratio), and line between generator and point of common coupling (voltage, reactance, and resistance). The SPP must at its own expense complete a test of the interconnection, witnessed by a utility representative. The utility responds to the application and completion of interconnection tests by issuing an interconnection certificate.

If the project has a capacity of 1 MW or more, the SPP must obtain a license from EWURA. Smaller projects do not require a license, but EWURA still requires registration of the project for informational purposes. For a project of less than 1 MW, the registration form is a single page, requiring basic identifying information about the project and SPP, nameplate data on the generator, how generating capacity will be divided between on-site use and power sales, and expected annual generation. For projects of 1 MW or greater, the form is four pages long and, in addition to the information requested on the short form, also includes questions regarding the SPP's technical and managerial competence and a more detailed project description. The applicant for a license must also provide a feasibility study, a business plan, and proof that necessary permits have been issued. EWURA must issue a license (or deny one with cause) within 45 days of receiving an application. The license is valid for 15 years and can be renewed in 15-year increments. The license fee is equivalent to approximately US$75.

Thailand

In Thailand, a Very Small Power Producer (VSPP) who wishes to sell electricity to the distribution utility submits a completed Application for Sale of Electricity (a four-page form) and System Interconnection (a separate two-page form) at the district office of the Metropolitan Electricity Authority or at the provincial office of the Provincial Electricity Authority where the VSPP plans to interconnect. These forms solicit

information about the proposed project, including technical specifications of the generating equipment, transformers, and related circuitry.

Since 2007 Thailand has maintained an adder program, which provides incentives to private renewable energy investors in the form of attractive tariffs for power fed into the grid. During the early years of the program, the utility to which the VSPP connected was the only party with which the VSPP needed to work to implement an interconnection agreement and power purchase agreement. Since June 2010, however, the Ministry of Energy has taken on authority for final approval of projects, adding new requirements including putting the burden on the VSPP to demonstrate project readiness (access to loans, land, and permits) and posting of a security deposit of about $6000 per MW, returned after the project is commissioned [44].

United States

Pacific Gas and Electric's (PG&E, a California-based utility) implementation of CPUC Rule 21 splits the process into two steps: application and interconnection. In the application process, the applicant contacts PG&E and completes an application. PG&E then performs an initial review and, if warranted by the screening process, a supplemental review and development of preliminary cost estimates and interconnection requirements. Where an interconnection study is required, the applicant and PG&E will commit to this additional step.

The interconnection process itself begins with the applicant and PG&E entering into an interconnection agreement. Financing and ownership agreements for interconnection facilities or distribution system modifications may also be needed. PG&E or the generator installs the required interconnection facilities or modifies PG&E's distribution system as needed. The generator then arranges for and completes commissioning testing of the generating facility and the interconnection facilities. Once all of these steps have been completed, PG&E authorizes parallel operation [59].

The application process (and associated fees) can be different depending on the size and type of the project. Generally, regulators and utilities offer a more streamlined process for smaller systems and for systems that help meet government or utility objectives such as renewable energy portfolios or carbon emissions reduction. It is important for small power producers to be aware of these tiers and take advantage of any streamlined processes available.

Freeing the Grid 2011 edition provides a scorecard for evaluating USA states' interconnection procedures. The scorecard assigns maximum value to tiered systems with four or more breakpoints or tiers [67].

11. Utility approval

Utilities in many parts of the world have had a lukewarm, or at times even contrary, attitude towards interconnection of distributed generation, including mini-grids, to utility grids. Worries about competition aside, utility concerns have included phase and voltage mismatch, potential damage to utility assets, and safety risks for both lineworkers and utility customers. As discussed in detail in Part I of this guidebook, these concerns have generally been addressed through technical solutions, such as anti-islanding features in inverters and coordinated relays, as well as equitable distribution of interconnection costs and legal and liability burdens. In spite of this, SPPs have in many instances had to take an activist role and lobby

regulators to adopt rules requiring utilities to accept interconnection of compliant distributed generation, including mini-grid systems. Fortunately, many utilities have come around to grid interconnection of distributed generation, and numerous jurisdictions have put in place standardized procedures for utility approval.

A number of criteria can determine how a utility approves, denies, or conditions interconnection of a distributed generator. The approval process typically employs a series of screens, or questions whose answers determine which procedural pathway the SPP must follow to interconnect their system. Failing to pass individual screens results in a progressively more rigorous and costly approval process for interconnection.

One important screen found in almost all interconnection procedures is system size, usually given in kW or kVA. Rather than having a pass/fail outcome, this screen classifies a system into one of two or more tiers. The higher the tier, the more rigorous the interconnection process requirements become. Systems in the lowest tier, for example rooftop PV systems limited to a few kW, may be eligible for an expedited process with minimal paperwork and inspection requirements. Table 4 shows the system size tiers employed by regulators in a number of countries.

Tanzania

In Tanzania, utility approval begins with the aforementioned Letter of Intent, in which the utility agrees in principle to do business with the SPP. Next, the SPP submits an application for interconnection and sale of electricity. Subject to approval of the application, the generator and utility sign a 15-year term standardized Small Power Purchase Agreement (SPPA). The SPPA specifies tariffs, dispute resolution, liability, default conditions, and other terms.

Thailand

In Thailand, a system that meets technical requirements and is smaller than 6 MW will be automatically approved for interconnection. A system of 6-10 MW can be accepted at utility discretion. If the utility declines to interconnect, the VSPP can appeal the decision to the government's Energy Policy and Planning Office. For systems that meet utility criteria, the utility has 45 days in which to notify the applicant of approval, and within another 15 days the utility must provide the VSPP with an estimate of interconnection costs to be borne by the VSPP. From the date that the VSPP receives approval, the VSPP has 60 days to sign a power purchase agreement with the utility.

United States

The IREC model interconnection procedures [61] serve as a carefully vetted example of how the interconnection approval process ideally works in the USA. The approval process will differ depending on which of the four levels into which the system size falls (see Table 4).

Table 4. Tiered processes used by different regulators

Entity	Tiers	Process	Comments
IEEE 1547.2 (Annex H)	< 10 kVA	Expedited	Inverter-based, uses certified equipment, passes all screens
	< 2,000 kVA	Simplified	Uses certified equipment, passes all screens
	> 2,000 kVA	Full Process	Fails multiple screens, uses non-certified equipment
MADRI	< 10 kVA	Level 1	Uses Appendix 1 form
	10 kVA < system < 2 MVA	Level 2	Uses Appendix 2 form
	2 MVA < system <10 MVA	Level 3	Uses Appendix 2 form
	2 MVA < system <10 MVA, no power export to grid	Level 3a	Expedited review
FERC	system <10 kw, inverter based	10 kW inverter process	
	system < 2 MW	fast track process	
	2 MW < system < 20 MW	study process	
IREC model interconnection procedures	< 25 kW	Level 1	Passes specified screens; 2-page form
	< 2 MW	Level 2	Passes specified screens; 5-page application and 13-page agreement
	< 10 MW	Level 3	See Level 2; does not export power to the grid
	> 10 MW	Level 4	Does not meet Level 1-3 criteria; 5-page application and 13-page agreement
Calif. Rule 21 (as applied by PG&E)	< 11 kVA	Automatically qualifies for Simplified Interconnection	
	> 11 kVA	May require Supplemental Review	
Japan	< 600V (low voltage)	See Table 7 in IEA-PVPS report [3]	
	600V – 7 kV (high voltage)		
	spot network		
	> 7 kV (super high voltage)		

Entity	Tiers	Process	Comments
Europe (DERLab)	< 1 kV, < 5 kW, < 16A per phase	Micro scale DER	
	< 1 kV, > 5 kW, > 16A per phase	Intermediate scale DER	
	> 1 kV	Large scale DER	
Energy and Water Utilities Regulatory Authority (EWURA Tanzania)	< 1 MW in rural areas	Exempt from EWURA license	Still need to register with EWURA for monitoring purposes
	> 1 MW	EWURA license required	
Thailand	< 1MW	guaranteed utility approval provided system complies with regulations	tariff = bulk tariff + wholesale charge
	1 MW < system < 6 MW	guaranteed utility approval provided system complies with regulations	tariff = 98% of (bulk tariff + wholesale charge)
	6 MW < system (export capacity) < 10 MW	case by case	If contracted capacity of a VSPP is greater than 6 MW, the utility will consider the purchase on a case by case basis

As an example of the use of regulatory screens in the U.S., FERC's Small Generator Interconnection Procedures include these screens:

- Small generating facility (SGF) capacity must be less than 2 MW.
- SGF must meet codes, standards and certification.
- Total SGF capacity must be less than 15% of peak load in the circuit.
- Total SGF fault current must be less than 10% of total fault current.
- Addition of SGF must not cause distribution equipment and protective devices to exceed 87.5% of rating.
- Transformer connection must be compatible with the utility circuit.
- If generation is single-phase, capacity must be less than 20kW [58], [68].

Screens are also specified in the IEEE 1547.2 guide [25], including generator size limits, self-contained operation, and equipment certification by a nationally recognized laboratory.

Studies may be required if the system does not pass screens, or if there is a high concentration of distributed generation in the area (as happened in Hawaii with residential/small commercial PV). Studies may include a simple impact study to determine whether IEEE 1547 requirements will be met by the proposed system, or detailed studies of system protection, steady-state performance, power quality, or system stability. The studies may reveal the need for mitigations, which in most cases are undertaken at the SPP's expense.

The screens and corresponding approval pathways for a project can be represented graphically, as the State of California's Rule 21 does in Figure 8. The figure shows how screen outcomes can lead to a generator undergoing simplified interconnection (the least burdensome route), supplemental review, or an interconnection study (the most rigorous process).

In addition to screens, utilities may have regulator-approved rules limiting high concentrations of distributed generation on any given distribution circuit in order to avoid mismatch between load and generation. For example, in the USA MADRI's guidelines specify that in most cases capacity must not exceed 15% of the annual peak load on a radial circuit, with stricter limits for spot and area networks. (These types of distribution systems are generally found in dense urban areas or large buildings.)

Regulators in California and Hawaii have recently moved to relax their limits on per-circuit DG, which many renewable energy advocates have criticized as needlessly restrictive.

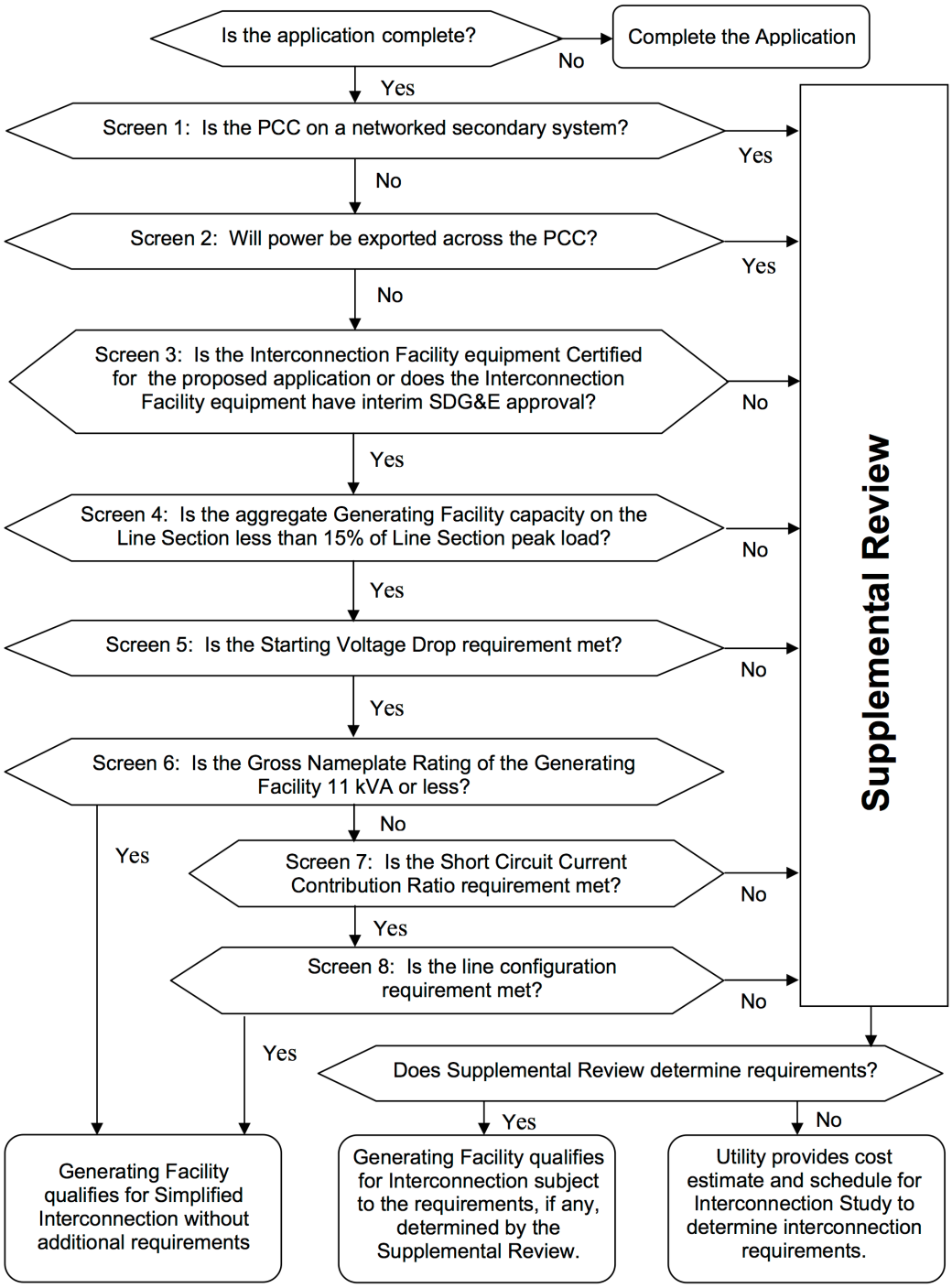

Figure 8. Example of the use of screens to determine interconnection process: initial review flowchart under California Public Utilities Commission Rule 21 [69]. (Note: PCC=Point of Common Coupling.)

12. Responsibility for implementation: utility or SPP?

The traditional approach to utility interconnection of distributed generation is for the SPP to take responsibility for equipment and installation on its side of the point of common coupling (PCC) and the utility to provide the equipment needed on its side of the PCC, with the utility reserving the right to inspect equipment and installation work on the SPP side of the connection. In many developing countries, regulators have established renewable/distributed energy goals and guidelines requiring utilities to give SPPs access to their distribution systems, but the utilities often give this lower priority than conventional electrification strategies of expanding central generation and transmission and distribution systems. To resolve this impasse, utilities in many countries now allow SPPs to take the lead on installing all of the lines, switchgear, and transformers needed to make the interconnection. Such arrangements may be subject to conditions allowing the utility to have final approval of equipment, suppliers, and installers, and leaving the utility with oversight of construction, testing, and commissioning. The SPP is normally responsible for long-term maintenance of the interconnection under such arrangements [17]. Policies in many countries dictate that such SPP-funded upgrades to the system are handed over (without compensation) to the utility to own, operate, and maintain. These assets can include distribution line upgrades, transformer upgrades, and other equipment.

13. Commissioning, testing, and follow-up

Once permission to interconnect is granted and the project is constructed, regulators and/or utilities commonly require commissioning or testing procedures. In addition, in some jurisdictions SPPs are required to file periodic (typically annual) reports on their interconnected systems with the utility or energy authority, and the utility may reserve the right to perform system inspections. In the USA, IEEE Std 1547-2003, subclause 5.4, calls for a commissioning test once the interconnection equipment is installed and ready for operation. The test should be performed by a qualified engineer according to written instructions from the equipment manufacturer or the system integrator that have been approved by both the DR owner and the utility. These tests simulate various abnormal conditions expected to cause the SPP to trip offline, including faults, over/undervoltage, frequency disturbances, and phase imbalance. Per IEEE, the utility has the right to observe the commissioning test or require written confirmation of the test's successful completion. The commissioning test does not need to be repeated unless setpoints on the interconnection equipment are changed.

In both Tanzania and Thailand, a system must pass a utility inspection before putting power into the grid. The utility has a window of 30 days in which to perform this inspection after receiving notice from the project developer that the system is complete and ready for interconnection.

In some cases, follow-up requirements are minimal after the original approval of the interconnection. In Tanzania, EWURA provides a standard form (form 7) for annual reporting to EWURA by SPPs. Most of the information requested is the same identifying information requested on the original application for interconnection. The only significant additional information requested is reporting on actual annual electricity generation and energy sales, either to the utility or directly to retail customers.

In the US, IREC's model interconnection procedures grant the utility the right to inspect an interconnected facility under "reasonable" conditions to protect the utility's equipment and its employees' safety.

14. Metering

Metering is normally installed at or near the point of common coupling (PCC) between SPP and utility-owned assets. While traditional analog meters measure only net cumulative energy (kWh), modern digital meters can measure a much wider range of parameters, including current, voltage, real and reactive power, maximum demand, and time of use. Many digital meters are now equipped to transfer these data wirelessly to the utility and/or the SPP. Depending on the particulars of a power purchase agreement, analog or digital meters may need to separately measure energy flows in both directions (import and export), or only net energy flow (imports minus exports). Standard required meter accuracy for generation and transmission systems is ±0.2% (known as Class 0.2 or Class 0.2 S).[15] For consumer meters in India, lower accuracy is accepted – class 1 (±1%) for connections under 650V and 0.5 S (±0.5%) for connections up to 33 kV. India's Central Electric Authority's metering regulations offer a useful template for national electric metering standards, addressing issues of meter ownership, location, and calibration ([70], amended by [71]).

15. Cost of interconnection

Costs associated with making a grid intertie can include hardware costs, labor associated with installing and commissioning the intertie equipment, administrative costs incurred by the utility, and liability insurance specific to the interconnection, which the utility may require the generator to carry.

Interconnection costs for distributed generation in the USA are highly variable depending on system size and the type of generator. For synchronous and induction generator-based systems, interconnection costs may require custom electrical design and can make up a significant fraction of total capital cost. For solar photovoltaic systems, on the other hand, requirements to automatically avoid unintentional islanding are met at relatively low cost by functions integral to any certified grid intertie inverter. According to the USA Department of Energy's SunShot Initiative, interconnection costs are minimal, adding approximately US$0.25/watt to the installed cost of a grid-connected photovoltaic system [72]. This is about 4% of the US$6.1/watt average installed system cost in the USA in 2011 for systems under 10 kW or 5% of the US$4.9/watt average installed system cost for systems over 100 kW [73].

In Sri Lanka, the community of Athureliya celebrated connection of its village hydro mini-grid to the national grid in November 2012. The 21.8 kW plant was built nine years earlier as a stand-alone system, one of some 300 in the country ranging from 3 to 55 kW in capacity. The village of 68 families was first connected to the grid in 2010, with most of the community switching over to main grid power. Only a few of the most isolated homes, unable to afford grid connection, continued to rely on the micro-hydro system. This made continued operation of the plant uneconomic. Connecting the system to the main grid allows the plant to continue operating, generating income for the village. Interconnection hardware costs were approximately US$11,500, and the village's net yearly earnings from the plant are expected to be $7,700. Plans are in development to connect some 100 additional village mini-grids to the main grid in a similar fashion to the Athureliya project, at an anticipated cost of US$1.5 million [74].

[15] Energy meter accuracy classes are defined by the IEC 62053 series of standards. Electromechanical (analog) meters can be class 0.5, 1, or 2; digital meters can be class 0.2 S, 0.5 S, 1, or 2. The "S" classes have better accuracy at lower currents.

For interconnecting rotating generation (syncrhonous or induction motors), it is most economical to use a single, integrated multi-function numerical relay unit of the type discussed in section 6.4. For example, Beckwith Electric cites approximate equipment costs ranging from US$1,500 for their M-3410A intertie/generator protection relay to $4,500 for their M-3425A (See Table 2 for a comparison of these and similar protective relays.) Such packaged systems do not include additional required equipment such as an appropriately specified breaker, voltage and current transformers, manual disconnects, and weatherproof enclosures, which can add substantially to total costs. Labor costs will vary depending on local economic conditions.

In 2001 in Thailand, the Department of Alternative Energy Development and Efficiency (DEDE) initiated a project to synchronize two 40 kW village micro-hydropower projects that had formerly powered isolated villages. The costs to upgrade the local transformer, refurbish the turbine, and install necessary synchronization equipment was estimated at US$25,000 per project. One project, at Mae Kam Pong village, was ultimately synchronized [75].

In principle, administrative fees the utility charges the mini-grid operator for interconnection should reflect actual costs incurred by the utility. As one example, Table 4 shows limits on interconnection fees permitted by regulations in Thailand.

Table 4. Interconnection fees for Very Small Power Producers in Thailand [76].

Item		**Approximate cost**	**Implementation time (days)**
Distribution system construction and modification		Depends on the distance and transformer size	40-55
Synchronization pattern checking		Max. US$480	3-5
Protective equipment testing		Max. US$1,600	3-5
Additional meter installation	Low voltage	US$50-640	
	High voltage	US$320-800	
Installation of synchronizing check relay at utility substation (applies only to systems over 6 MW)		US$6,400 per set	

Sri Lanka's Sustainable Energy Authority has established a somewhat simpler capacity-based permitting fee scale, approximately US$1,000 for the first MW of a grid-connected renewable energy system and US$500 for each additional MW [77]. In the case of Tanzania, Energy and Water Utilities Regulatory Authority (EWURA) interconnection fees are not set, but policy requires the District Network Operator (DNO, i.e., the utility) to provide the SPP with a rough estimate of interconnection costs within 30 days of the DNO issuing its Letter of Intent to cooperate with the SPP on a proposed power project.

IREC's *Connecting to the Grid* guide includes a discussion of fees and charges specific to the USA. IREC is critical of excessive inspection fees sometimes assessed by utilities, reportedly as high as US$900 in some cases even for small photovoltaic systems. Charges reported by IREC also include monthly fees for a second utility meter, needed in some cases to measure energy exported to the grid from the DG system. This may be needed in the few states where net metering is not yet used, or where the customer is tracking exports for purpose of selling Renewable Energy Certificates (RECs) associated with the exported energy. These meter fees are generally modest, $4 to $8 per month. Another charge identified by

IREC is the standby charge (typically $2 to $20 per month per kW of system capacity) some utilities charge in order to provide backup power in the event a DG system fails or goes off-line. However, many states have abolished these charges for small DG systems.

To cite an example of regulated fee structures in the USA, under California's Rule 21, PG&E charges a US$800 initial review fee. This fee is waived for net-metering-eligible systems. Half of the fee is refunded if an application is withdrawn or rejected. A supplemental review fee (an additional US$600, also waived for net-metering-eligible systems) may be required if the project does not pass initial review. An interconnection study may be required, for which PG&E will provide a cost estimate. Study costs up to $5,000 are waived for solar projects that do not sell power to the grid. Where the generator is not net-metering-eligible, the generator is responsible for all review and study costs. Where the generator is to be net metered, the generator is responsible only for interconnection facility costs (not for review fees, interconnection study, or any needed modifications to the distribution system).

Utilities may require a generator connecting to the grid to carry liability insurance against lineworker injury or damage to utility equipment. In the USA, many states limit what liability coverage utilities can require and may require a utility and system owner to mutually indemnify each other. Some USA utilities have called for customer-generators to list the utility as "additional insured" on their policies, but insurers and state regulators have rejected this.

16. Tying it all together: best practices for interconnection

Grid interconnection of mini-grids in the developing world is for the most part a fairly recent phenomenon. The development of best practices for such interconnections is thus still a work in progress, and no international group has yet produced an agreed-to set of standard policies and procedures. However, many experts we have consulted note the need for such standardization and the need for utility buy-in. In reviewing a draft version of this guidebook, Gabriel Barta, head of technical coordination for the IEC, noted: "Practical application of the Guide, it seems to me, depends directly on a very important but so far underestimated area, where standards are crucial but practically non-existent . . . : the utilities' rules for connecting a mini-grid. Historically utilities have not seen this as an area where any but their own company standards could possibly be relevant. This has now changed, and the Guide shows how useful it would be for mini-grid operators if utilities' regulations all used the same technical knowledge – i.e., if they were based on International Standards. These standards should now be written, and the IEC will need the regulators' cooperation to know how to frame them." It thus appears the IEC is poised to take the lead on this important effort.

On the technical side, standards from IEC and IEEE identified in section 9 of this guide are being applied internationally to varying degrees. A key unmet need is for the regulatory "glue" that connects technical standards and the players involved. More specifically, procedural rules are needed that energy regulators can adopt, obligating both private and public utilities to cooperate and setting out rights and responsibilities for grid connection of systems that meet agreed-upon technical standards. One example of such a document that addresses interconnection of formerly isolated mini-grids is EWURA's SPP rules [46].

The USA-based Network for New Energy Choices (NNEC) publishes an annually updated *Freeing the Grid* guide that grades states in the USA on their policies for net metering and interconnection of

distributed renewable energy systems [67]. Not all of the criteria used to score USA states are applicable for mini-grids used for rural electrification in developing countries, the focus of this guidebook. However, selected best practices identified in *Freeing the Grid* appear highly transferable to the international context:

- A broad range of technologies should be eligible for interconnection, with policies updated periodically to accommodate technological innovation.
- Simplified interconnection procedures should be available for use with smaller systems and those sized mainly to meet on-site loads.
- Processes for assessing applications should be tiered at multiple levels of complexity and rigor, according to system size.
- Governments should limit the amount of time utilities are allowed to process applications from SPPs.
- Interconnection fees should be reasonable and should be waived for net-metered connections (i.e., connections where the SPP will only offset net on-site energy use and will not be compensated in cash by the utility for net positive generation)
- External disconnect switches should not be required in inverter-based systems, as all code-compliant inverters have internal circuitry making such switches unnecessary.
- Regulators should limit utilities' ability to require interconnected SPPs to assume liability for damage caused by the interconnection or to carry liability insurance.
- A process should be in place for resolution of disputes among SPPs, utilities, and regulators.

See Appendix 3 for a complete list of factors considered in NNEC's scoring rubric for USA states. An organization that is internationally active in energy access work would be well positioned to play the role on an international level that NNEC is playing in the USA to promote fair grid access for SPPs.

17. Future Directions

Grid interconnection of renewable energy systems, including mini-grids, is a rapidly evolving landscape. New technologies including advanced integrated relays, synchrophasors (see Appendix 1), new networking devices, pre-paid energy metering systems, and super-efficient loads keep entering the market, and policy makers and regulators struggle to keep up with the changes.

As one example of an emerging technology application for mini-grids, inexpensive data transmission over mobile phone networks or by satellite can be used for internet-based monitoring and control of mini-grids, including dispatch (though as noted earlier, not for high-speed, safety-critical operations such as transfer tripping). This wireless technology is a low-cost alternative to fiber optic lines or leased phone lines and would work anywhere there is a mobile-phone signal or where a satellite dish can be deployed. One of the authors recently visited a remote hydropower project in Tanzania that uses this technology to control a grid-connected, island-capable 4 MW hydropower plant and 16-village mini-grid.

On the policy side, power purchase agreements for renewable energy SPPs have conventionally been 'must take' contracts where the utility must compensate the SPP for all energy exported to the grid at all times. As renewable energy penetration increases, and policy makers continue to strive for even more grid-tied renewables, contracts that allow for either dispatchable renewable generation and/or curtailment

on a signal from the utility for a certain number of hours per year will be useful tools for bringing more renewable capacity online without threatening grid stability or having to dump power.

Conclusion

The merging of renewable energy mini-grids with regional or national power grids calls for standardized best practices and technologies to ensure safety, efficiency, reliability, and best value for mini-grid operators, utilities, and their customers. The practices and technologies outlined in this guidebook can be adapted to local needs and conditions in order to ensure smooth integration of mini-grids into national power systems.

This guidebook is deliberately brief and provides only an overview of the subject of grid interconnection and islanded operation of mini-grid power systems. The appendices that follow direct the reader to numerous additional resources providing more details on the topic.

References

[1] Institute of Electrical and Electronics Engineers, "IEEE Guide for Design, Operation, and Integration of Distributed Resource Island Systems with Electric Power Systems," IEEE Std 1547.4, Jul. 20, 2011.

[2] J.L. Blackburn and T.J. Domin, *Protective Relaying: Principles and Applications*, 3rd Edition. Boca Raton, FL: CRC Press, 2007.

[3] International Energy Agency, "Design and operational recommendations on grid connection of PV hybrid mini-grids. IEA PVPS Task 11, Subtask 20, Activity 25," IEA-PVPS T11-06, Oct. 2011. http://www.iea-pvps-task11.org/HTMLobj-188/Activity25-Publish.pdf

[4] Joint UNDP/World Bank Energy Sector Management Assistance Program (ESMAP), "Mini-Grid Design Manual," Technical Paper 007, Sep. 2000. http://www.riaed.net/IMG/pdf/Mini-Grid_Design_Manual-2.pdf

[5] Socialist Republic of Vietnam, Ministry of Industry, "Technical Regulations for Rural Electrification/Electric Network." Socialist Republic of Vietnam, Ministry of Industry, 2006.

[6] Energy and Water Utilities Regulatory Agency (Tanzania), "Guidelines for Grid Interconnection of Small Power Projects in Tanzania. Part A: Mandatory Requirements and Test Procedure." Energy and Water Utilities Regulatory Agency, Mar. 2009.

[7] B. Rekhani, personal communication, Nov. 2011.

[8] L. Keosela, "Status of Power Sector in Cambodia," Chiang Mai, Thailand, Jan. 2013.

[9] A. Ghosh, "India's grid expansion erodes island solar scheme," *AlertNet*, Oct. 24, 2012. http://www.trust.org/alertnet/news/indias-grid-expansion-erodes-island-solar-scheme

[10] Energy Services Delivery/Renewable Energy for Rural Economic Development Projects (Sri Lanka), "Village Hydro Specifications." 1999. http://www.energyservices.lk/pdf/techspecs/vh_w_b/line.pdf

[11] Central Electricity Authority (India), "Technical Standards for Connectivity to the Grid," *Gazette of India, Part III, Section 4*, no. 26, pp. 6365–6382, Jun. 26, 2010. http://www.cea.nic.in/reports/regulation/grid_standards_reg.pdf

[12] Hawaii Electric Light Company, "Rule No. 14: Service Connections and Facilities on Customer's Premises." 2011. http://www.heco.com/vcmcontent/HELCO/RenewableEnergy/HELCORules14.pdf. [Accessed: 30-Mar-2013]

[13] Hawaiian Electric Company, "Net Energy Metering in Hawaii." http://www.heco.com/portal/site/heco/menuitem.508576f78baa14340b4c0610c510b1ca/?vgnextoid

=12a290a2decab110VgnVCM1000005c011bacRCRD&cpsextcurrchannel=1. [Accessed: 30-Mar-2013]
[14] Maui Electric Company, Ltd., "MECO Requirements for Inverter-Based Generators." http://www.mauielectric.com/portal/site/meco/menuitem.ed4aed221358a44973b5c410c510b1ca/?vgnextoid=0706812edc035210VgnVCM1000005c011bacRCRD&vgnextchannel=db1d32db96315210VgnVCM1000005c011bacRCRD&vgnextfmt=default. [Accessed: 30-Mar-2013]
[15] W.J. Duncan and R. Cline, "Mechanical Governors for Hydroelectric Units," United States Department of the Interior, Bureau of Reclamation, Jul. 2002. http://www.usbr.gov/power/data/fist/fist2_3/vol2-3.pdf
[16] J.B. Ekanayake, "Induction generators for small hydro schemes," *Power Engineering.*, vol. 16, no. 2, pp. 61–67, Apr. 2002. http://www.who.int/management/InductionGenerators%20forSmallHydroSchemes.pdf
[17] C. Greacen, T. Siyambalapitiya, and B. Tenenbaum, "From The Bottom Up: Using Small Power Producers to Promote Electrification and Renewable Energy in Africa: An Implementation Guidebook for Regulators and Policymakers." Forthcoming 2013.
[18] W. Bower and M. Ropp, "Evaluation of Islanding Detection Methods for Utility-Interactive Inverters in Photovoltaic Systems," Sandia National Laboratories, Sandia Report SAND2002-3591, Nov. 2002. http://prod.sandia.gov/techlib/access-control.cgi/2002/023591.pdf
[19] Alternate Hydro Energy Center, Indian Institute of Technology Roorkee, "Electro-Mechanical Works – Guidelines for Power Evacuation and Interconnection with Grid," in *Standards/Manuals/Guidelines for Small Hydro Development*, Sep. 19, 2008. http://ahec.org.in/pdf/3.10_GL_for_Power_evacuation_and_interconnection_with_Grid.pdf
[20] Z. Ye, R. Walling, L. Garces, R. Zhou, L. Li, and T. Wang, "Study and Development of Anti-Islanding Control for Grid-Connected Inverters," National Renewable Energy Laboratory, Subcontractor Report NREL/SR-560-36243, May 2004. http://www.nrel.gov/docs/fy04osti/36243.pdf
[21] L. Varnado and M.P.E. Sheehan, "Connecting to the Grid: A Guide to Distributed Generation Interconnection Issues. Sixth Edition," Interstate Renewable Energy Council, 2009. http://irecusa.org/wp-content/uploads/2009/11/Connecting-to-the-Grid-Guide-6th-edition.pdf
[22] CADDET Centre for Renewable Energy, "Small-scale Hydro-power at Mae Ya, Thailand.," 1997. http://www.caddet-re.org/assets/no57.pdf
[23] Small Hydro Action for the Promotion of Efficient Solutions (SHAPES), "Grid Connection Equipment and Technology – Best Practice and Philosophy," in *Micro and Mini Hydro Development on the Indian Subcontinent: a Guide*, New Delhi, India: The Energy and Resources Institute, Nov. 2008. http://www.teriin.org/events/micro/DR-S6-RevA.pdf
[24] World Bank, "TANESCO Grid Code for Embedded Generation." World Bank, Jun. 2012.
[25] Institute of Electrical and Electronics Engineers, "IEEE Application Guide for IEEE Std 1547, IEEE Standard for Interconnecting Distributed Resources with Electric Power Systems," IEEE Std 1547.2-2008, Apr. 15, 2009.
[26] J. Sanchez, "Choosing a Battery-Based Inverter," *Home Power*, no. 149, pp. 68–75, Jul. 2012. https://homepower.com/articles/choosing-battery-based-inverter-0
[27] Mera Gao Power, "Mera Gao Power." Jan. 2013. http://meragaopower.com/. [Accessed: 30-Mar-2013]
[28] Basler Electric, "Generator Protection Application Guide." Feb. 2013. http://www.basler.com/downloads/genprotguidE.pdf
[29] R.C. Dugan, "Examples of ferroresonance in distribution systems," in *IEEE Power Engineering Society General Meeting, 2003*, 2003, vol. 2, pp. 1213–1215. http://www.ece.mtu.edu/faculty/bamork/FR_WG/Panel/DuganPanel.pdf
[30] C.J. Mozina, "Operating DGs in parallel with utility distribution systems is not without hazards," *PAC World*, no. Summer 2008, pp. 20–25, 2008. http://www.pacw.org/fileadmin/doc/SummerIssue08/cover_story_summer08.pdf

[31] P. Fuangfoo, "Personal communication," 2012.
[32] TE Connectivity, "Crompton Instruments Protector Trip Relays." 2008. http://www.crompton-instruments.com/datasheets/2011/Protector_Trip_Relays_2008_B.pdf
[33] Eaton Cutler-Hammer, "Magnum Closed Transition Soft Load Transfer Switches: Technical Data." 2005. http://www.eaton.com/ecm/idcplg?IdcService=GET_FILE&allowInterrupt=1&RevisionSelectionMethod=LatestReleased&Rendition=Primary&&dDocName=TD01602007E
[34] Basler Electric, "BE1-951 Multifunction Protection System." Sep. 2012. http://www.basler.com/downloads/BE1-951bull14.pdf. [Accessed: 30-Mar-2013]
[35] Basler Electric, "BE1-IPS100 Intertie Protection System." Sep. 2012. http://www.basler.com/downloads/BE1-IPS100bull9.pdf. [Accessed: 30-Mar-2013]
[36] Schweitzer Engineering Laboratories, "SEL-547 Distributed Generator Interconnection Relay." 2003. https://www.selinc.com/SEL-547/
[37] Schweitzer Engineering Laboratories, "SEL-351 Protection System." 2012. https://www.selinc.com/SEL-351/
[38] Beckwith Electric Co., Inc., "M-3520 Intertie Protection System." Sep. 2011. http://www.beckwithelectric.com/products/m-3520.html. [Accessed: 30-Mar-2013]
[39] Beckwith Electric Co., Inc., "M-3410A Intertie/Generator Protection Relay." Jan. 2011. http://www.beckwithelectric.com/products/m-3410a.html. [Accessed: 30-Mar-2013]
[40] Provincial Electricity Authority (Thailand), "Regulations governing the use of electric network." 2008. http://www.pea.co.th/vspp/etc/grid_code.pdf
[41] International Electrotechnical Commission, "Photovoltaic (PV) systems - Characteristics of the utility interface," IEC 61727 ed2.0, 2004. http://webstore.iec.ch/webstore/webstore.nsf/artnum/033529
[42] International Electrotechnical Commission, "Test procedure of islanding prevention measures for utility-interconnected photovoltaic inverters," IEC 62116 ed1.0, 2008. http://webstore.iec.ch/webstore/webstore.nsf/Artnum_PK/41906
[43] International Electrotechnical Commission, "Technical Specifications 62257: Recommendations for small renewable energy and hybrid systems for rural electrification, part 9-2: Microgrids," IEC/TS 62257-9-2 ed1.0, 2006. http://webstore.iec.ch/webstore/webstore.nsf/Artnum_PK/36931
[44] S. Tongsopit and C. Greacen, "Thailand's Renewable Energy Policy: FiTs and Opportunities for International Support," May 31, 2012. http://www.palangthai.org/docs/ThailandFiTtongsopit&greacen.pdf
[45] Energy and Water Utilities Regulatory Agency (Tanzania), "Guidelines for Grid Interconnection of Small Power Projects in Tanzania. Part B: Technical Guidelines." Energy and Water Utilities Regulatory Agency, Mar. 2009.
[46] Energy and Water Utilities Regulatory Authority (Tanzania), "Development of Small Power Projects (SPP) in Tanzania." 2012. http://www.ewura.go.tz/sppselectricity.html. [Accessed: 30-Mar-2013]
[47] Central Electricity Authority (India), "Technical standards for connectivity of the distributed generation resources." 2012. http://www.cea.nic.in/reports/regulation/distributed_gen.pdf
[48] Ministry of New & Renewable Energy, "Jawaharlal Nehru National Solar Mission: Phase II – Policy Document." Ministry of New & Renewable Energy, Dec. 2012. http://mnre.gov.in/file-manager/UserFiles/draft-jnnsmpd-2.pdf
[49] P. Sreedharan, R. Ghanadan, L. Alagappan, S. Price, A. Olson, and R. Bharvirkar, "Electricity grid evolution in India: A scoping study on the technical and planning needs to support the National Action Plan." Sep. 2011.
[50] Economic Consulting Associates and Ramboll Group, "Final Report: Technical and Economical Study of Small Scale Grid Connected Renewable Energy in Kenya," Aug. 2012.
[51] Asian Development Bank, "Bhutan: Energy Sector." Aug. 2010. http://www.oecd.org/countries/bhutan/47177609.pdf

[52] National Assembly of Bhutan, "Electricity Act of Bhutan, 2001." Jul. 26, 2001. http://www.nationalcouncil.bt/wp-content/uploads/2011/02/Electricity_En_01.pdf
[53] Bhutan Electricity Authority, "Bhutan Electricity Authority Grid Code Regulation, 2008." 2008. http://www.bea.gov.bt/wp-content/uploads/2012/02/Grid-Code-Regulation_-20.pdf
[54] Bhutan Electricity Authority, "Licensees." 2012. http://www.bea.gov.bt/?page_id=140. [Accessed: 29-Mar-2013]
[55] K. Dorji, "The sustainable management of micro hydropower systems for rural electrification: the case of Bhutan," Master's Thesis, Humboldt State University, Dec. 2007. http://hdl.handle.net/2148/287
[56] Norlha Associates, "Feasibility and Basic Design Study on Potential Mini / Micro Hydropower Systems in Bhutan," Sep. 2008.
[57] North Carolina State University, "Rules, Regulations, & Policies for Renewable Energy," *Database of State Incentives for Renewables & Efficiency (DSIRE)*. http://dsireusa.org/summarytables/rrpre.cfm. [Accessed: 30-Mar-2013]
[58] Federal Energy Regulatory Commission (USA), "Small Generator Interconnection Procedures (For Generating Facilities No Larger Than 20 MW)." 2006. http://www.ferc.gov/industries/electric/indus-act/gi/small-gen/procedures.doc
[59] Pacific Gas and Electric Company, "Electric Rule No. 21: Generating Facility Interconnections." Mar. 2011. http://www.pge.com/tariffs/tm2/pdf/ELEC_RULES_21.pdf
[60] Mid-Atlantic Demand Resource Initiative, "MADRI Model Small Generator Interconnection Procedures." Nov. 22, 2005. http://sites.energetics.com/MADRI/pdfs/inter_modelsmallgen.pdf
[61] Interstate Renewable Energy Council, "Model Interconnection Procedures." 2009. http://irecusa.org/wp-content/uploads/2010/01/IREC-Interconnection-Procedures-2010final.pdf
[62] J.B. Keyes and K.T. Fox, "Comparison of the Four Leading Small Generator Interconnection Procedures," Solar America Board for Codes and Standards, Oct. 2008. http://www.solarabcs.org/interconnection/
[63] IPCC, *Special Report on Renewable Energy Sources and Climate Change Mitigation.* Cambridge and New York: Cambridge University Press, 2011. http://srren.ipcc-wg3.de/report
[64] KEMA, Inc., "Distributed Generation in Europe – Physical Infrastructure and Distributed Generation Connection." 2011. http://www.energy.ca.gov/2011_energypolicy/documents/2011-05-09_workshop/documents/Memo%201_Physical%20Infrastructure%20and%20DG%20Interconnection.pdf
[65] DERlab, "Deliverable 2.1: Key needs, priorities and framework for the development of a common European pre-standard on DER interconnection." 2008. http://www.der-lab.net/downloads/d2.1_rev7f_pu01.pdf
[66] A. Mbawala and N. Kahyoza, "Regulatory Guidelines and Rules for Development and Operation of Small Power Projects (SPP) in Tanzania: Maputo Workshop, Africa Electrification Initiative," Jun. 11, 2009.
[67] Network for New Energy Choices, "Freeing the Grid: Best Practices in State Net Metering Policies and Interconnection Procedures. 2012 Edition." 2012. http://freeingthegrid.org/wp-content/uploads/2013/02/FTG2012.pdf
[68] A. Ellis and Sandia National Laboratories (USA), "Interconnection Standards for PV Systems: Where are we? Where are we going?," Cedar Rapids, Iowa, Oct. 7, 2009. http://www.uwig.org/pvwork/4-Ellis-InterconnectionStandards.pdf
[69] California Energy Commission (USA), "California Interconnection Guidebook: A Guide to Interconnecting Customer-owned Electric Generation Equipment to the Electric Utility Distribution System Using California Electric Rule 21." Jul. 2003. http://www.energy.ca.gov/distgen/interconnection/2003-07-10_DRAFTGUIDEBOOK.PDF
[70] Central Electricity Authority (India), "Central Electricity Authority (Installation and Operation of Meters) Regulations, 2006," *Gazette of India, Extraordinary, Part III, Section 4*, no. 40, Mar. 17, 2006. http://www.cea.nic.in/reports/regulation/meter_reg.pdf

[71] Central Electricity Authority (India), "Central Electricity Authority (Installation and Operation of Meters) Amendment Regulations, 2010," *Gazette of India, Part III, Section 4*, no. 26, pp. 6360–6364, Jun. 26, 2010. http://www.cea.nic.in/reports/regulation/amend_meter_reg.pdf
[72] J. Morris, "Developing Solar Friendly Communities Permitting, Interconnection, and Net Metering: An Overview of Model Standards and Policy Design Criteria," Rocky Mountain Institute, 2012. http://www.rmi.org/Knowledge-Center/Library/2012-06_DevelopingSolarFriendlyCommunities
[73] G. Barbose, N. Darghouth, and R. Wiser, "Tracking the Sun V." Lawrence Berkeley National Laboratory, Nov. 2012. http://emp.lbl.gov/publications/tracking-sun-v-historical-summary-installed-price-photovoltaics-united-states-1998-2011
[74] A. Cabraal, "Athureliya – From Village Hydro to Small Power Producer," Nov. 2012.
[75] S. Payomsarit, personal communication, Dec. 5, 2012.
[76] Energy Policy and Planning Office, Ministry of Energy (Thailand), "Regulations for the Purchase of Power from Very Small Power Producers (for the Generation Using Cogeneration System) (unofficial English translation)." http://www.eppo.go.th/power/vspp-eng/Regulations%20-VSPP%20Cogen-10%20MW-eng.pdf
[77] P.C. Ranawaka, "Regulations made by the Minister of Power and Energy implementing the Sri Lanka Sustainable Energy Authority Act, No. 35 of 2007." Sri Lanka Sustainable Energy Authority, May 10, 2011. http://www.energy.gov.lk/pdf/gazette/1705_22_E.pdf
[78] C.R. Mason, *Art & Science of Protective Relaying*. General Electric, 1956. http://www.gedigitalenergy.com/multilin/notes/artsci/index.htm
[79] Basler Electric, "Transformer Protection Application Guide." Jun. 2007. http://www.basler.com/downloads/transfguide.pdf
[80] J.W. Gajda and M. Lanier, "Distributed Generation Intertie With Advanced Recloser Control." Progress Energy and Schweitzer Engineering Laboratories, 2008. https://www.selinc.com/WorkArea/DownloadAsset.aspx?id=3517
[81] T. Ohno, T. Yasuda, O. Takahashi, M. Kaminaga, and S. Imai, "Islanding protection system based on synchronized phasor measurements and its operational experiences," Jul. 2008, pp. 1–5.
[82] E.O. Schweitzer, D. Whitehead, G. Zweigle, and K.G. Ravikumar, "Synchrophasor-based power system protection and control applications," presented at the 63rd Annual Conference for Protective Relay Engineers, College Station, TX, Mar. 2010, pp. 1–10.

Appendices

The appendices that follow add detail to the discussion of mini-grid interconnection issues in this guidebook. Appendix 1 describes additional relays that are often used in grid-connected power systems but are less likely than those in Chapter 7 to be required in the small systems that are the focus of this guidebook. Appendix 2 lists some of the key players in the mini-grid and interconnection arenas. Appendix 3 is a list of recommended reading, including several documents that were of use in preparing this guidebook. Appendix 4 is a brief list of manufacturers and suppliers specializing in the equipment used for interconnecting mini-grid electric systems.

Appendix 1. Less-common relays and protection strategies generally *not* required for systems under 200 kW

These relays and circuit protection strategies are generally not required by utilities for systems of the scale of interest in this guidebook, but they may be of value to protect the generator's assets. We encourage utilities and regulators not to require these devices and methods unless there is a demonstrable need to protect utility equipment that cannot be protected using relays discussed in the main text of the document. In jurisdictions where clear rules on interconnection have not yet been worked out, the generator may offer to include one or more of these relay types as appropriate in order to reassure the utility that its assets and lineworkers are adequately protected.

As in section 6.1, ANSI/IEEE device numbers are given in parentheses.

Distance relays (21)

Distance relays are a category of relays that measure the ratio of voltage to current, or impedance,[16] of a part of the power system [2], [78]. The impedance of a transmission line is generally proportional to its length, so a distance relay can respond to faults that are within a specified distance from the relay. Unlike a time-overcurrent relay, which responds more slowly to distant faults, a distance relay responds quickly to any fault within the specified distance. Distance relays are most commonly used for transmission line protection, but they can also be used to protect generators, particularly if the generator protection must coordinate with distance relays elsewhere in the utility network [78].

Power direction/reverse power relay (32)

The reverse power relay prevents power from flowing into the generator if its source of mechanical power is lost, for example if the water flow to a micro-hydro generator is interrupted. Without this protection, the generator would act as a motor, potentially causing mechanical damage or, in the case of a fuel-powered generator, a fire hazard due to unburned fuel. In a mini-grid where the generator is intended only to meet local loads, the reverse power relay can also be used to prevent exporting of power to the utility. (This situation could occur if the local load suddenly decreases, for example if a distribution line is taken out of service.) This protection is required if the utility does not allow power to flow out of the mini-grid

[16] For a resistor, the impedance is the same as the resistance. For circuits that are not purely resistive, including most components of a power system, the impedance is a complex quantity with a real part (resistance) and imaginary part (reactance); these components are analogous to the real and reactive power. Many distance relays do not respond directly to the impedance but rather to the reactance or to the admittance (the reciprocal of the impedance). Since admittance is measured in mhos (also called siemens), admittance relays are often called "mho relays."

(for technical, economical, or regulatory reasons) and may also be used if exporting power to the utility is technically possible and permitted, but uneconomical.

Negative sequence overcurrent (46) or overvoltage relay (47)

The negative sequence overcurrent relay protects against unbalanced loads exceeding the design limits of the generator, which can cause overheating and damage to the generator. This relay serves as backup protection to detect unbalanced system faults. The negative sequence overvoltage relay (47) is another means of detecting load imbalance or faults and can also detect improper wiring of the generator [28]. The negative sequence overcurrent relay is also sometimes given the number 50Q or 51Q [79], and the negative sequence overvoltage relay is occasionally given the number 59Q (as in [37]).

Residual neutral overcurrent relay (51N)

The residual time overcurrent relay protects against generator ground faults [28]. The 51N relay measures the generator ground current indirectly by monitoring the three phase currents. (For current in the neutral to be nonzero, there must be an imbalance in the phase currents.) Like the 50/51 relays discussed above, this relay's operation must be coordinated with that of other relays in the system. (This relay can use the same current transformers as the 50/51 overcurrent relays.)

Ground overcurrent relay (51G)

The 51G relay is similar to the 51N but measures the ground current directly using a current transformer on the ground conductor.

Ground overvoltage relay (59N)

This relay is used to detect ground faults in high- and medium-impedance grounding systems. In these systems, the generator neutral is connected to ground through a resistor, and current flowing through the resistor due to a ground fault creates a voltage drop that can be detected by the 59N relay. This relay also detects loss of a single phase in these systems.

Voltage balance relay (60)

The voltage balance relay is used to detect blown voltage transformer fuses in systems with multiple sets of three-phase VTs. For example, a generator installation may have one set of VTs for the voltage regulator and one set for the protective relays; the voltage balance relay compares the output voltages of the two sets of VTs. If the VT supplying the generator's voltage regulator is lost, the voltage balance relay disables the regulator to prevent it from erroneously increasing the generator output voltage. If the voltage transformer supplying the protective relays is lost, the voltage balance relay disables the protective functions that depend on voltage measurements to prevent them from tripping unnecessarily [28].

Directional overcurrent relay (67/67N)

The directional overcurrent relay (67) trips only if a fault is in a specified direction from the relay. This type of relay can be used if other forms of relaying are insufficient to distinguish between faults in the relay's primary protection zone and those outside.

Transfer trip (intertripping) schemes

A transfer-trip or intertripping scheme allows protective equipment at one location to open circuit breakers at another. For example, a utility could use a transfer-trip scheme to ensure that a small generator disconnects in case of a fault at the utility's substation. Transfer trip requires a dedicated communication line between the transmitting and receiving locations; frequently, this is a leased telephone line or a digital radio or fiber-optic link [2], [80]. Mobile phone networks and the public switched telephone network typically do not meet utility requirements for reliability and speed. Transfer-trip schemes can be expensive to construct and can add significant complexity to an interconnection project, particularly if multiple facilities must be coordinated; thus, a transfer-trip requirement can be a significant barrier to interconnection for small power producers [21], [80].

Phasor measurement units

Phasor measurement units (PMUs), also known as synchrophasors, are a new technology that can be used for islanding detection. PMUs are devices with precisely GPS-synchronized clocks that directly measure the phase of the AC voltage waveform. If a section of the grid is islanded, the voltage will drift out of phase with the rest of the grid; the PMUs can detect this condition and shut down the islanded generators or shed load to match the available generation on the island [81]. This system has been used successfully in Japan [81] and the U.S. [82]. Since the phase angle at different points in the system must be compared, the use of PMUs, like transfer trip schemes, requires a means of communication between substations. One advantage of PMUs is that a PMU scheme is insensitive to changes in the topology of the utility grid [82]. In addition to their use in islanding detection, PMUs can be used to detect other abnormal conditions and to provide detailed real-time measurements of power flow in utility networks.

Appendix 2. Key players in interconnection policy and mini-grids

The following are public and private sector entities that have set policy, developed standards, or otherwise contributed to the advancement of utility interconnection of distributed generation, including renewable energy. Information many of these organizations offer on their websites about utility interconnection of distributed generation has been used in the development of this guidebook.

International

- International Energy Agency (IEA) – operates a Photovoltaic Power Systems Programme, which produced a report titled *Design and operational recommendations on grid connection of PV hybrid mini-grids*, one of the very few documents identified to date that directly addresses grid interconnection of mini-grids. The authors conducted a detailed survey of mini-grid operators in nine different countries (half are in Japan; others include Mongolia, Thailand, Myanmar, China, Rwanda, Malaysia, Canada, Germany), collecting information about requirements for grid interconnection and detection methods for islanding and power quality anomalies. Of the 16 systems studied, six are autonomous and ten are grid-tied. Fault detection methods include over/under relays and "active/passive detection." Five of the grid-tied sites are equipped to operate in islanding mode when the grid is down. http://www.iea-pvps.org/
- Alliance for Rural Electrification (ARE) – Brussels-based organization bringing manufacturers and NGOs together to advocate for best practices in rural electrification in the developing world emphasizing renewable energy. http://www.ruralelec.org/
- U.S. Agency for International Development (USAID) – together with the Business Council for Sustainable Energy (BCSE), authored *Increasing Energy Access in Developing Countries: The Role of Distributed Generation.* http://usaid.gov/
- Joint UNDP/World Bank Energy Sector Management Assistance Programme (ESMAP) – published technical manual on mini-grids in 2000. http://www.esmap.org/
- Distributed Energy Resources Laboratory (DERLab) – working on regional interconnection policy and standards for Europe. http://www.der-lab.net/
- IEEE – developed widely used/cited IEEE Std 1547, Standard for Interconnecting Distributed Resources with Electric Power Systems; actually a set of standards, some of which are still in draft form. IEEE 1547-4, on islanding DG systems, was just published in 2011. http://www.ieee.org
- UL – developed widely used/cited UL 1741, Inverters, Converters, Controllers and Interconnection System Equipment for Use with Distributed Energy Resources. http://www.ul.com/global/eng/pages/
- International Electrotechnical Commission (IEC) – developed IEC 61727, ed. 2.0: *Photovoltaic (PV) systems - Characteristics of the utility interface* [41]; IEC 62116, ed. 1.0: *Test procedure of islanding prevention measures for utility-interconnected photovoltaic inverters* [42]; and the 62257 series of technical specifications: *Recommendations for small renewable energy and hybrid systems for rural electrification* [43].

Country-specific

- Energy and Water Utilities Regulatory Agency (EWURA) – Tanzanian regulator that has developed extensive guidelines for grid connection of distributed energy systems. http://www.ewura.go.tz/newsite/
- Federal Energy Regulatory Commission (FERC) – sets federal policy in the USA for transmission-level interconnection of distributed generation. http://www.ferc.gov/
- Interstate Renewable Energy Council (IREC) – active in the USA in advocating for policy on interconnection and net metering for distributed generation; has created model procedures. http://www.irecusa.org/
- Network for New Energy Choice (NNEC) – publishes annual *Freeing the Grid* report card on state-level policy on interconnection and net metering in the USA. http://www.gracelinks.org/835/energy-program
- State public utility commissions – set policy at state level on interconnection and net metering, e.g., California Public Utilities Commission's Rule 21 in California. http://www.cpuc.ca.gov/puc/ and others
- National Association of Regulatory Utility Commissioners (NARUC) – published model USA interconnection rules in 2003, seems to have stepped back from this role since then. http://www.naruc.org/
- Consortium for Electric Reliability Technology Solutions (CERTS) –program of Lawrence Berkeley National Laboratory in the USA, focused mainly on large-scale grid interconnection issues; have published numerous technical papers. http://certs.lbl.gov/
- Mid-Atlantic Demand Resource Initiative (MADRI) – regional program in the eastern USA setting standards for grid connection through its Interconnection Subgroup. http://sites.energetics.com/MADRI/
- National Renewable Energy Laboratory (NREL) – have published several studies on technical and policy aspects of grid interconnection for renewables in the USA and internationally; Thomas Basso and Richard DeBlasio of NREL are prominent figures in IEEE 1547 standards development work. http://www.nrel.gov/
- Solar America Board for Codes and Standards (Solar ABCs) –funded by the USA Department of Energy, pushes for reform and national standardization on interconnection policy. http://www.solarabcs.org/

Appendix 3. Recommended further reading

These documents have been of value in developing this guide and may be of interest to readers who wish to investigate the topic of grid interconnection of distributed generation in greater detail.

Multi-national

Design and operational recommendations on grid connection of PV hybrid mini-grids (IEA)

Prepared as the deliverable for Activity 25 (interconnection & islanding issues), subtask 20 (control issues), task 11 (PV hybrid systems within mini-grids) of the International Energy Agency's Photovoltaic Power Systems Programme (PVPS).

Authors investigated control methods in existing mini-grid sites via a questionnaire (conducted 2008-2010); researched technical requirements in Japan, Europe, and the US; and considered role for PV mini-grids in large scale RE. Some sites investigated are grid connected, others not. Survey included questions about power quality requirements, connection/disconnection issues, islanding (detection method, keep operating or shut down in islanding conditions, reconnection), reverse power flow provisions. Of 16 respondents (subset of 46 identified/contacted systems), half are in Japan; others include Mongolia, Thailand, Myanmar, China, Rwanda, Malaysia, Canada, Germany. Six are autonomous, 10 grid-tied (this difference triggered different versions of survey). Methods for detection of islanding include overvoltage, undervoltage, overfrequency, and underfrequency relays and "active/passive detection." Five sites are equipped to operate in islanding mode when grid is down.
http://www.iea-pvps.org/index.php?id=95&eID=dam_frontend_push&docID=1027

The Art and Science of Protective Relaying

by C. Russell Mason. Available free on General Electric's website. Has been used for years as teaching notes for GE's power systems engineering course. Written in 1956, this book does not describe recent advances such as multi-function microprocessor-based protective relays.
http://www.gedigitalenergy.com/multilin/notes/artsci/index.htm

Developing World

Energy Sector Management Assistance Program (ESMAP) Mini-Grid Manual

This document, published as a joint World Bank/UNDP effort, does not discuss connection of mini-grids with the main grid, but it does provide a detailed discussion of all the technical issues associated with building a stand-alone mini-grid for rural electrification.
http://www.esmap.org/sites/esmap.org/files/TR_minigriddesignmanual21364.pdf

On-Grid Renewable Energy Development: A Guide to the Project Approval Process for On-Grid Renewable Energy Project Development.

Sri Lanka Sustainable Energy Authority, July 2011.
http://www.energy.gov.lk/pdf/guideline/Grid_Renewable.pdf

Guidelines for Grid Interconnection of Small Power Projects in Tanzania. Part A: Mandatory Requirements and Test Procedure and Part B: Technical Guidelines

EWURA (Tanzania), March 2009.

http://www.ewura.com/pdf/SPPT/PROPOSED%20GUIDELINES/TECHNICAL%20GUIDELINES/Guidelines%20for%20Grid%20Interconnection%20-%20Part%20A.pdf (Part A)
http://www.ewura.com/pdf/SPPT/PROPOSED%20GUIDELINES/TECHNICAL%20GUIDELINES/Guidelines%20for%20Grid%20Interconnection%20-%20Part%20B.pdf (Part B)

Distribution Utilities' Regulations for Synchronization of Generators with Net Output Under 10 MW to the Distribution Utility System

Energy Policy and Planning Office (EPPO), Ministry of Energy (Thailand), 2010.
http://www.eppo.go.th/power/vspp-eng/VSPP%20Synchronization%2010%20MW-eng.pdf

Technical Regulations for Rural Electrification/Electric Network

The Socialist Republic of Vietnam, Ministry of Industry, 2006.
http://ppp.worldbank.org/public-private-partnership/sites/ppp.worldbank.org/files/documents/Vietnam11Technical1standards10Part0I.pdf

Industrialized Countries

Connecting to the Grid Guide (IREC)

A useful explanation in plain English of the policy and technical issues surrounding grid connection of distributed generation in the United States.
http://irecusa.org/wp-content/uploads/2009/11/Connecting-to-the-Grid-Guide-6th-edition.pdf

IREC 2009 Model Interconnection Procedures

The gold standard for interconnection procedures in the United States. More liberal (i.e., generator-friendly) than the three other major standards from MADRI, FERC, and State of California.
http://irecusa.org/wp-content/uploads/2010/01/IREC-Interconnection-Procedures-2010final.pdf

IEEE 1547

The technical standard referenced by all United States and many non-United States interconnection procedures or standards. Actually a set of standards including IEEE 1547-2003 *Standard for Interconnecting Distributed Resources with Electric Power Systems*, and IEEE 1547.4, *Guide for Design, Operation, and Integration of Distributed Resource Island Systems with Electric Power Systems*
http://grouper.ieee.org/groups/scc21/dr_shared/

FERC Small Generator Interconnection Procedure & FERC Order 2006

FERC's federal standard applies only to generating systems 20 MW or less that connect to the grid at transmission level (i.e., high voltage). Distribution level connections are governed by state public utility commissions (e.g., Rule 21 in California's case).
http://www.ferc.gov/industries/electric/indus-act/gi/small-gen.asp

California Rule 21

Adopted by the California Public Utilities Commission and interpreted/implemented by the state's investor-owned utilities. Part C describes the interconnection process.
http://www.cpuc.ca.gov/PUC/energy/Procurement/LTPP/rule21.htm

Model Interconnection Procedures and Agreement for Small Distributed Generation Resources (NARUC)

Last updated in 2003. Dated, but of historic importance because it was submitted to FERC and laid the groundwork for FERC's 2006 Small Generator Interconnection Procedure.
http://www.naruc.org/Publications/dgiaip_oct03.pdf

Freeing the Grid (NNEC)

Updated annually, this document includes a scorecard comparing USA states against IREC model interconnection policies. Fourteen criteria (plus a "miscellaneous" category) are used to rate state policies. The system uses a U.S.-style grading scale of A, B, C, D, and F, with A being the highest score and F being a failing grade.

Policy points are assigned in *Freeing the Grid's* scorecard for:

- Eligible technologies (0 points for "all customer-sited generators qualify", -1 point for "only renewable generators permitted")
- Individual system capacity (most points for up to 20 MW, least points for up to 500 kW)
- Breakpoints for process (most points for 4 levels, least for one-size-fits-all)
- Timelines (should be shorter than FERC standards)
- Interconnection charges (most points where "fees are waived for net-metered customers and interconnection charges are capped," least points where "fees are generally double or more than the FERC standards")
- Engineering charges (1 point where engineering fees are fixed, 0 points if not)
- External disconnect switch (more points for not requiring switch)
- Certification (points for consistency with UL 1741/IEEE 1547)
- Technical screens (points for using FERC's screens)
- Network interconnection (most points where "both spot and area network interconnections are allowed with flexible criteria based on customer load characteristics")
- Standard form agreement (most points for "standard agreement with friendly clauses")
- Insurance requirements (most points for "no additional insurance required for non-inverter based systems under 50 kW or inverter-based systems under 1 MW")
- Dispute resolution (most points for process in place)
- Rule coverage (most points for rules that apply to all utilities, not just IOUs)
- Miscellaneous (a few additional items)

In addition to its scoring of interconnection rules, *Freeing the Grid* also includes a separate scorecard for net metering rules. One of the policy points here is for "aggregate net metering," a policy whereby a generator/customer can aggregate multiple metered connections at a site and have them all treated as a single net metered account. This can be economically advantageous to the customer by allowing electricity use on multiple meters to be offset by distributed generation on a single meter and by eliminating multiple monthly service charges. Seventeen of the 44 states with net metering policies offer some form of aggregation. (Not mentioned in this document but recently introduced in California, virtual net metering goes a step further by allowing a customer to aggregate meters located at different customer-owned sites.)
http://freeingthegrid.org/wp-content/uploads/2012/12/FTG2012.pdf

Appendix 4. Selected equipment manufacturers and suppliers

The following are a few examples of producers or sellers of equipment used in utility interconnection of distributed generation. This list is provided for informational purposes only and is not intended to be a complete list of all manufacturers or suppliers of equipment appropriate for grid interconnection. **The authors and sponsors of this publication do not endorse these or any other products.**

Manufacturer/suppliers of integrated relays and related equipment

Beckwith Electric: Design, manufacture, sales, and commissioning of equipment for electric power system control, protection, and synchronization.
http://www.beckwithelectric.com/
Beckwith Electric Co., Inc.
6190-118th Avenue
North Largo, Florida 33773-3724
USA
Phone: +1 (727) 544-2326 • Fax: +1 (727) 546-0121
Email: sales@beckwithelectric.com

Crompton Instruments (part of TE Connectivity): manufacturer of grid interconnection relays and related instrumentation.
http://www.crompton-instruments.com
Freebournes Road
Witham, Essex CM8 3AH
UK
Phone: +44 (0) 1376 509 533
Email: Cromptontechnical@te.com

Thomson & Howe: manufacturer of turnkey grid interconnection packages for small-scale induction and synchronous generators up to 200 kW.
Induction: http://www.smallhydropower.com/thes.html#no17
Synchronous: http://www.smallhydropower.com/thes.html#no18
Thomson and Howe Energy Systems Inc.
8107 Highway 95A
Kimberly, British Columbia
Canada V1A 3L6
Phone: +1 (250) 427-4326 • Fax: +1 (250) 427-3577
Email: thes@cintek.com

Schweiter Engineering Laboratories: manufacturer of integrated protective relays for generator and transmission protection and automation and control systems for power distribution systems.
https://www.selinc.com/
2350 NE Hopkins Court
Pullman, WA 99163
USA
Phone: +1 (509) 332-1890 • Fax: +1 (509) 332-7990
Email: info@selinc.com

Sustainable Power Systems: offers "a full suite of modular and flexible power components and control systems that integrate and manage power generation from different sources: wind, solar, and diesel."

Products include a hybrid system supervisory controller, secondary load controller, synchronous condenser, and an energy storage power converter.
http://www.sustainablepowersystems.com/
3131 75th St., Suite 250
Boulder, CO 80301
USA
Phone: +1 (303) 442-4910 • Fax:+ 1 (303) 442-4914
Email: steve@sustainablepowersystems.com

Manufacturer/suppliers of grid-tie inverters capable of intentional islanding

OutBack Power
www.outbackpower.com
5917 195th St NE
Arlington, WA 98223
Phone: +1 (360) 435-6030
Fax: +1 (360) 435-6019
Email: sales@outbackpower.com

SMA
http://www.sma.de/en
Sonnenallee 1
34266 Niestetal
Germany
Phone: +49 561 9522 0
Fax: +49 561 9522 100
Email: info@SMA.de

Schneider Electric SA
http://www.schneider-electric.com
35 rue Joseph Monier
92500 Rueil Malmaison - France
Phone: +33 (0) 1 41 29 70 00
Fax: +33 (0) 1 41 29 71 00
Email: order.admin@us.schneider-electric.com

Princeton Power Systems, Inc.
http://www.princetonpower.com
3175 Princeton Pike
Lawrenceville, NJ 08648
Phone: +1 (609) 955-5390
Fax: +1 (609) 751-9225
Email: info@princetonpower.com